# Hand pallet truck

## AM l20 / l20p

Lift height: 120 mm / Load capacity: 2000 kg

JUNGHEINRICH

# AM l20 / l20p

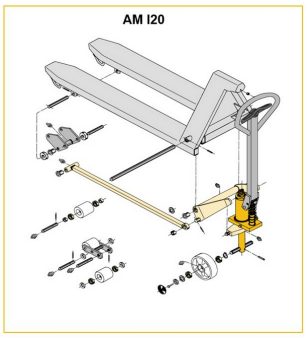


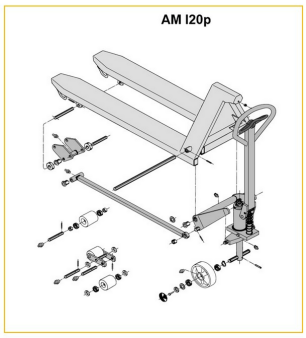


| | |
|---|---|
| Inox AISI 316 (V4A) | Feuerverzinkt |
| Inox AISI 303/304 (V2A) | Verzinkt und gelb chromatiert |

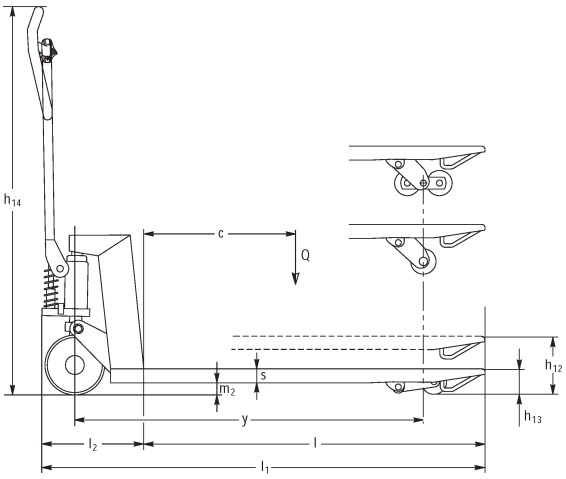


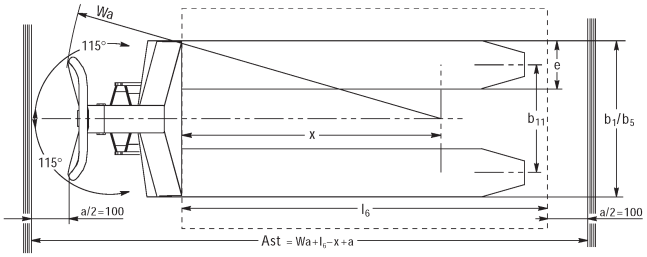


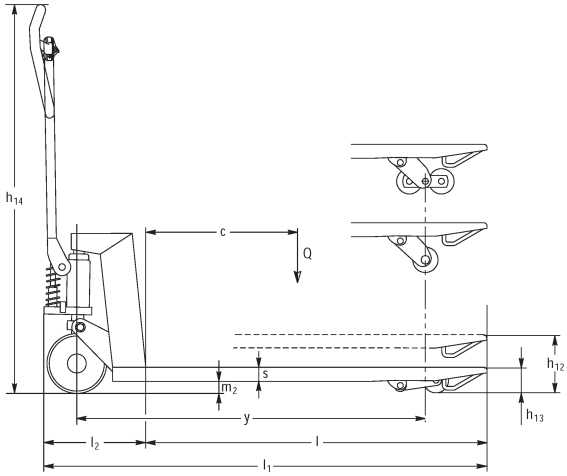


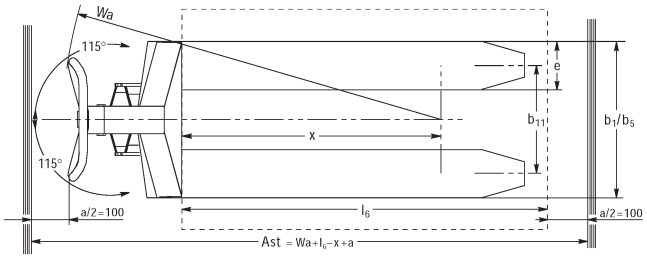

# VDI table

| | | | | | | | | | | |
|---|---|---|---|---|---|---|---|---|---|---|
| Characteristic | 1.1 | Manufacturer (abbreviated description) | | | Jungheinrich | | | | | |
| | 1.2 | Manufacturer's type designation | | | AM I20 / I20p | | | | | |
| | 1.3 | Drive | | | Manual | | | | | |
| | 1.4 | Operation | | | Manual | | | | | |
| | 1.5 | Load capacity/load | Q | kg | 2000 | | | | | |
| | 1.6 | Load centre distance | c | mm | 610 | | | | 570 | |
| | 1.9 | Wheelbase | y | mm | 1245 | | | | 1165 | |
| Weights | 2.1 | tare weight | | kg | 81 | | 78 | | | |
| | 2.1.1 | Service weight (incl. battery) | | kg | 81 | | 78 | | - | |
| Wheels/suspension system | 3.1 | Tyres | | | V-BV | N-BN | V-GV | N-GN | V-BV | N-BN |
| | 3.2 | Tyre size, front | | | Ø 200x50 | | | | | |
| | 3.3 | Tyre size, rear | | | Ø 80x70 | Ø 80x65 | Ø 80x90 | | Ø 80x70 | Ø 80x65 |
| | 3.5 | Wheels, number front/back (x=driven) | | | 2/2 | | | | | |
| | 3.6 | Tread width, front | b10 | mm | 120 | | | | | |
| | 3.7 | Tread width, rear | b11 | mm | 520 | | | | | |
| Basic dimensions | 4.4 | Lift (h3) | h3 | mm | 120 | | | | | |
| | 4.9 | Height of tiller handle in drive position min./max. | h14 | mm | 1170 | | | | | |
| | 4.14 | Stand height, elevated | h12 | mm | 205 | | | | | |
| | 4.15 | Height, lowered | h13 | mm | 85 | | | | | |
| | 4.19 | total length | l1 | mm | 1555 | | | | 1475 | |
| | 4.21.1 | total width | b1 | mm | 680 | | | | | |
| | 4.22 | Fork dimensions | s/e/l | mm | 51 x 160 x 1220 | | | | 51 x 160 x 1140 | |
| | 4.25 | Width across forks | b5 | mm | 680 | | | | | |
| | 4.32 | Ground clearance centre of wheelbase | m2 | mm | 34 | | | | | |
| | 4.34.1 | Aisle width (pallet 1000x1200 sideways) | Ast | mm | 1610 | | | | | |
| | 4.34.2 | Aisle width (pallet 800x1200 length) | Ast | mm | 1830 | | | | 1810 | |
| | 4.35 | Turning radius | Wa | mm | 1410 | | | | 1330 | |
| Performance data | 5.3 | Lowering speed laden/unladen | | m/s | 0.1 / 0.05 | | | | | |

- This data sheet according to VDI guideline 2198 only states the technical values of the standard truck. Different tyres, other masts, additional equipment etc. may result in different values.

| | | | | | | | | | | |
|---|---|---|---|---|---|---|---|---|---|---|
| Characteristic | 1.1 | Manufacturer (abbreviated description) | | | Jungheinrich | | | | | |
| | 1.2 | Manufacturer's type designation | | | AM I20 / I20p | | | | | |
| | 1.3 | Drive | | | Manual | | | | | |
| | 1.4 | Operation | | | Manual | | | | | |
| | 1.5 | Load capacity/load | Q | kg | 2000 | | | | | |
| | 1.6 | Load centre distance | c | mm | 570 | | 485 | | | |
| | 1.9 | Wheelbase | y | mm | 1165 | | 995 | | | |
| Weights | 2.1 | tare weight | | kg | 75 | | 72 | | 69 | |
| | 2.1.1 | Service weight (incl. battery) | | kg | - | | 72 | | 69 | 66 |
| Wheels/suspension system | 3.1 | Tyres | | | C-GV | N-GN | V-BV | N-BN | V-GV | N-GN |
| | 3.2 | Tyre size, front | | | Ø 200x50 | | | | | |
| | 3.3 | Tyre size, rear | | | Ø 80x90 | | Ø 80x70 | Ø 80x65 | Ø 80x90 | |
| | 3.5 | Wheels, number front/back (x=driven) | | | 2/2 | | | | | |
| | 3.6 | Tread width, front | b10 | mm | 120 | | | | | |
| | 3.7 | Tread width, rear | b11 | mm | 520 | | | | | |
| Basic dimensions | 4.4 | Lift (h3) | h3 | mm | 120 | | | | | |
| | 4.9 | Height of tiller handle in drive position min./max. | h14 | mm | 1170 | | | | | |
| | 4.14 | Stand height, elevated | h12 | mm | 205 | | | | | |
| | 4.15 | Height, lowered | h13 | mm | 85 | | | | | |
| | 4.19 | total length | l1 | mm | 1475 | | 1305 | | | |
| | 4.21.1 | total width | b1 | mm | 680 | | | | | |
| | 4.22 | Fork dimensions | s/ e/l | mm | 51 x 160 x 1140 | | 51 x 160 x 970 | | | |
| | 4.25 | Width across forks | b5 | mm | 680 | | | | | |
| | 4.32 | Ground clearance centre of wheelbase | m2 | mm | 34 | | | | | |
| | 4.34.1 | Aisle width (pallet 1000×1200 sideways) | Ast | mm | 1610 | | | | | |
| | 4.34.2 | Aisle width (pallet 800x1200 length) | Ast | mm | 1810 | | | | | |
| | 4.35 | Turning radius | Wa | mm | 1330 | | 1160 | | | |
| Performance data | 5.3 | Lowering speed laden/unladen | | m/s | 0.1 / 0.05 | | | | | |

- This data sheet according to VDI guideline 2198 only states the technical values of the standard truck. Different tyres, other masts, additional equipment etc. may result in different values.

| | | | | | | | | | | |
|---|---|---|---|---|---|---|---|---|---|---|
| Characteristic | 1.1 | Manufacturer (abbreviated description) | | | Jungheinrich | | | | | |
| | 1.2 | Manufacturer's type designation | | | AM I20 / I20p | | | | | |
| | 1.3 | Drive | | | Manual | | | | | |
| | 1.4 | Operation | | | Manual | | | | | |
| | 1.5 | Load capacity/load | Q | kg | 2000 | | | | | |
| | 1.6 | Load centre distance | c | mm | 405 | | | | 610 | |
| | 1.9 | Wheelbase | y | mm | 835 | | | | 1245 | |
| Weights | 2.1 | tare weight | | kg | 69 | | 65 | | 75 | |
| | 2.1.1 | Service weight (incl. battery) | | kg | - | | | | 75 | |
| Wheels/suspension system | 3.1 | Tyres | | | V-BV | N-BN | V-GV | N-GN | V-BV | N-BN |
| | 3.2 | Tyre size, front | | | Ø 200x50 | | | | | |
| | 3.3 | Tyre size, rear | | | Ø 80x70 | Ø 80x65 | Ø 80x90 | | Ø 80x70 | Ø 80x65 |
| | 3.5 | Wheels, number front/back (x=driven) | | | 2/2 | | | | | |
| | 3.6 | Tread width, front | b10 | mm | 120 | | | | | |
| | 3.7 | Tread width, rear | b11 | mm | 520 | | | | 360 | |
| Basic dimensions | 4.4 | Lift (h3) | h3 | mm | 120 | | | | | |
| | 4.9 | Height of tiller handle in drive position min./max. | h14 | mm | 1170 | | | | | |
| | 4.14 | Stand height, elevated | h12 | mm | 205 | | | | | |
| | 4.15 | Height, lowered | h13 | mm | 85 | | | | | |
| | 4.19 | total length | l1 | mm | 1145 | | | | 1555 | |
| | 4.21.1 | total width | b1 | mm | 680 | | | | 520 | |
| | 4.22 | Fork dimensions | s/e/l | mm | 51 x 160 x 810 | | | | 51 x 160 x 1220 | |
| | 4.25 | Width across forks | b5 | mm | 680 | | | | 520 | |
| | 4.32 | Ground clearance centre of wheelbase | m2 | mm | 34 | | | | | |
| | 4.34.1 | Aisle width (pallet 1000x1200 sideways) | Ast | mm | 1610 | | | | | |
| | 4.34.2 | Aisle width (pallet 800x1200 length) | Ast | mm | 1810 | | | | 1830 | |
| | 4.35 | Turning radius | Wa | mm | 1000 | | | | 1410 | |
| Performance data | 5.3 | Lowering speed laden/unladen | | m/s | 0.1 / 0.05 | | | | | |

- This data sheet according to VDI guideline 2198 only states the technical values of the standard truck. Different tyres, other masts, additional equipment etc. may result in different values.

| | | | | | | | | | | |
|---|---|---|---|---|---|---|---|---|---|---|
| Characteristic | 1.1 | Manufacturer (abbreviated description) | | | Jungheinrich | | | | | |
| | 1.2 | Manufacturer's type designation | | | AM I20 / I20p | | | | | |
| | 1.3 | Drive | | | Manual | | | | | |
| | 1.4 | Operation | | | Manual | | | | | |
| | 1.5 | Load capacity/load | Q | kg | 2000 | | | | | |
| | 1.6 | Load centre distance | c | mm | 610 | | 570 | | | |
| | 1.9 | Wheelbase | y | mm | 1245 | | 1165 | | | |
| Weights | 2.1 | tare weight | | kg | 72 | | | | 69 | |
| | 2.1.1 | Service weight (incl. battery) | | kg | 72 | | - | | | |
| | 2.2 | Axle load laden front/rear | | - | - / - | | | | 636 / 1432 | |
| | 2.3 | Axle load unladen front/rear | | - | - / - | | | | 21 / 47 | |
| Wheels/suspension system | 3.1 | Tyres | | | V-GV | N-GN | V-BV | N-BN | V-GV | N-GN |
| | 3.2 | Tyre size, front | | | Ø 200x50 | | | | | |
| | 3.3 | Tyre size, rear | | | Ø 80x90 | | Ø 80x70 | Ø 80x65 | Ø 80x90 | |
| | 3.5 | Wheels, number front/back (x=driven) | | | 2/2 | | | | | |
| | 3.6 | Tread width, front | b10 | mm | 120 | | | | | |
| | 3.7 | Tread width, rear | b11 | mm | 360 | | | | | |
| Basic dimensions | 4.4 | Lift (h3) | h3 | mm | 120 | | | | | |
| | 4.9 | Height of tiller handle in drive position min./max. | h14 | mm | 1170 | | | | 1220 / 1170 | |
| | 4.14 | Stand height, elevated | h12 | mm | 205 | | | | | |
| | 4.15 | Height, lowered | h13 | mm | 85 | | | | | |
| | 4.19 | total length | l1 | mm | 1555 | | 1475 | | | |
| | 4.20 | Length including fork shank | l2 | mm | - | | | | 340 | |
| | 4.21.1 | total width | b1 | mm | 520 | | | | | |
| | 4.22 | Fork dimensions | s/ e/l | mm | 51 x 160 x 1220 | | 51 x 160 x 1140 | | | |
| | 4.25 | Width across forks | b5 | mm | 520 | | | | | |
| | 4.32 | Ground clearance centre of wheelbase | m2 | mm | 34 | | | | | |
| | 4.34.1 | Aisle width (pallet 1000x1200 sideways) | Ast | mm | 1610 | | | | | |
| | 4.34.2 | Aisle width (pallet 800x1200 length) | Ast | mm | 1830 | | 1810 | | | |
| | 4.35 | Turning radius | Wa | mm | 1410 | | 1330 | | | |
| Performance data | 5.3 | Lowering speed laden/unladen | | m/s | 0.1 / 0.05 | | | | | |

- This data sheet according to VDI guideline 2198 only states the technical values of the standard truck. Different tyres, other masts, additional equipment etc. may result in different values.

| | | | | | | | | | | |
|---|---|---|---|---|---|---|---|---|---|---|
| Characteristic | 1.1 | Manufacturer (abbreviated description) | | | Jungheinrich | | | | | |
| | 1.2 | Manufacturer's type designation | | | AM I20 / I20p | | | | | |
| | 1.3 | Drive | | | Manual | | | | | |
| | 1.4 | Operation | | | Manual | | | | | |
| | 1.5 | Load capacity/load | Q | kg | 2000 | | | | | |
| | 1.6 | Load centre distance | c | mm | 485 | | | | 405 | |
| | 1.9 | Wheelbase | y | mm | 995 | | | | 835 | |
| Weights | 2.1 | tare weight | | kg | 66 | | 63 | | | |
| | 2.1.1 | Service weight (incl. battery) | | kg | 66 | | 63 | | - | |
| Wheels/suspension system | 3.1 | Tyres | | | V-BV | N-BN | V-GV | N-GN | V-BV | N-BN |
| | 3.2 | Tyre size, front | | | Ø 200x50 | | | | | |
| | 3.3 | Tyre size, rear | | | Ø 80x70 | Ø 80x65 | Ø 80x90 | | Ø 80x70 | Ø 80x65 |
| | 3.5 | Wheels, number front/back (x=driven) | | | 2/2 | | | | | |
| | 3.6 | Tread width, front | b10 | mm | 120 | | | | | |
| | 3.7 | Tread width, rear | b11 | mm | 360 | | | | 335 | |
| Basic dimensions | 4.4 | Lift (h3) | h3 | mm | 120 | | | | | |
| | 4.9 | Height of tiller handle in drive position min./max. | h14 | mm | 1170 | | | | | |
| | 4.14 | Stand height, elevated | h12 | mm | 205 | | | | | |
| | 4.15 | Height, lowered | h13 | mm | 85 | | | | | |
| | 4.19 | total length | l1 | mm | 1305 | | | | 1145 | |
| | 4.21.1 | total width | b1 | mm | 520 | | | | | |
| | 4.22 | Fork dimensions | s/e/l | mm | 51 x 160 x 970 | | | | 51 x 160 x 810 | |
| | 4.25 | Width across forks | b5 | mm | 520 | | | | | |
| | 4.32 | Ground clearance centre of wheelbase | m2 | mm | 34 | | | | | |
| | 4.34.1 | Aisle width (pallet 1000x1200 sideways) | Ast | mm | 1610 | | | | | |
| | 4.34.2 | Aisle width (pallet 800x1200 length) | Ast | mm | 1810 | | | | | |
| | 4.35 | Turning radius | Wa | mm | 1160 | | | | 1000 | |
| Performance data | 5.3 | Lowering speed laden/unladen | | m/s | 0.1 / 0.05 | | | | | |

- This data sheet according to VDI guideline 2198 only states the technical values of the standard truck. Different tyres, other masts, additional equipment etc. may result in different values.

| | | | | | | | | | |
|---|---|---|---|---|---|---|---|---|---|
| Characteristic | 1.1 | Manufacturer (abbreviated description) | | | Jungheinrich | | | | |
| | 1.2 | Manufacturer's type designation | | | AM I20 / I20p | | | | |
| | 1.3 | Drive | | | Manual | | | | |
| | 1.4 | Operation | | | Manual | | | | |
| | 1.5 | Load capacity/load | Q | kg | 2000 | | | | |
| | 1.6 | Load centre distance | c | mm | 405 | | | | |
| | 1.9 | Wheelbase | y | mm | 835 | | | | |
| Weights | 2.1 | tare weight | | kg | 59 | | | 63 | |
| | 2.1.1 | Service weight (incl. battery) | | kg | - | 59 | | 63 | |
| Wheels/suspension system | 3.1 | Tyres | | | V-GV | N-GN | V-GV | N-BN | V-BV |
| | 3.2 | Tyre size, front | | | Ø 200x50 | | | | |
| | 3.3 | Tyre size, rear | | | Ø 80x90 | | | Ø 80x65 | Ø 80x70 |
| | 3.5 | Wheels, number front/back (x=driven) | | | 2/2 | | | | |
| | 3.6 | Tread width, front | b10 | mm | 120 | | | | |
| | 3.7 | Tread width, rear | b11 | mm | 335 | 360 | | | |
| Basic dimensions | 4.4 | Lift (h3) | h3 | mm | 120 | | | | |
| | 4.9 | Height of tiller handle in drive position min./max. | h14 | mm | 1170 | | | | |
| | 4.14 | Stand height, elevated | h12 | mm | 205 | 200 | | | |
| | 4.15 | Height, lowered | h13 | mm | 85 | | | | |
| | 4.19 | total length | l1 | mm | 1145 | | | | |
| | 4.21.1 | total width | b1 | mm | 520 | | | | |
| | 4.22 | Fork dimensions | s/ e/l | mm | 51 x 160 x 810 | | | | |
| | 4.25 | Width across forks | b5 | mm | 520 | | | | |
| | 4.32 | Ground clearance centre of wheelbase | m2 | mm | 34 | 38 | | | |
| | 4.34.1 | Aisle width (pallet 1000x1200 sideways) | Ast | mm | 1610 | | | | |
| | 4.34.2 | Aisle width (pallet 800x1200 length) | Ast | mm | 1810 | | | | |
| | 4.35 | Turning radius | Wa | mm | 1000 | | | | |
| Performance data | 5.3 | Lowering speed laden/unladen | | m/s | 0.1 / 0.05 | | | | |

- This data sheet according to VDI guideline 2198 only states the technical values of the standard truck. Different tyres, other masts, additional equipment etc. may result in different values.

| | | | | | | | | | | | |
|---|---|---|---|---|---|---|---|---|---|---|---|
| Characteristic | 1.1 | Manufacturer (abbreviated description) | | | Jungheinrich | | | | | | |
| | 1.2 | Manufacturer's type designation | | | AM I20 / I20p | | | | | | |
| | 1.3 | Drive | | | Manual | | | | | | |
| | 1.4 | Operation | | | Manual | | | | | | |
| | 1.5 | Load capacity/load | Q | kg | 2000 | | | | | | |
| | 1.6 | Load centre distance | c | mm | 485 | | | | 570 | | |
| | 1.9 | Wheelbase | y | mm | 995 | | | | 1165 | | |
| Weights | 2.1 | tare weight | | kg | 63 | | 66 | | 69 | | |
| | 2.1.1 | Service weight (incl. battery) | | kg | 63 | | 66 | | 69 | | |
| | 2.2 | Axle load laden front/rear | | - | - / - | | | | 636 / 1432 | | - / - |
| | 2.3 | Axle load unladen front/rear | | - | - / - | | | | 21 / 47 | | - / - |
| Wheels/suspension system | 3.1 | Tyres | | | N-GN | V-GV | N-BN | V-BV | N-GN | | V-GV |
| | 3.2 | Tyre size, front | | | Ø 200x50 | | | | | | |
| | 3.3 | Tyre size, rear | | | Ø 80x90 | | Ø 80x65 | Ø 80x70 | Ø 80x90 | | |
| | 3.5 | Wheels, number front/back (x=driven) | | | 2/2 | | | | | | |
| | 3.6 | Tread width, front | b10 | mm | 120 | | | | | | |
| | 3.7 | Tread width, rear | b11 | mm | 360 | | | | | | |
| Basic dimensions | 4.4 | Lift (h3) | h3 | mm | 120 | | | | | | |
| | 4.9 | Height of tiller handle in drive position min./max. | h14 | mm | 1170 | | | | | | |
| | 4.14 | Stand height, elevated | h12 | mm | 200 | | | | | | |
| | 4.15 | Height, lowered | h13 | mm | 85 | | | | | | |
| | 4.19 | total length | l1 | mm | 1305 | | | | 1475 | | |
| | 4.20 | Length including fork shank | l2 | mm | - | | | | 340 | | - |
| | 4.21.1 | total width | b1 | mm | 520 | | | | | | |
| | 4.22 | Fork dimensions | s/ e/l | mm | 51 x 160 x 970 | | | | 51 x 160 x 1140 | | |
| | 4.25 | Width across forks | b5 | mm | 520 | | | | | | |
| | 4.32 | Ground clearance centre of wheelbase | m2 | mm | 38 | | | | | | |
| | 4.34.1 | Aisle width (pallet 1000x1200 sideways) | Ast | mm | 1610 | | | | | | |
| | 4.34.2 | Aisle width (pallet 800x1200 length) | Ast | mm | 1810 | | | | | | |
| | 4.35 | Turning radius | Wa | mm | 1160 | | | | 1330 | | |
| Performance data | 5.3 | Lowering speed laden/unladen | | m/s | 0.1 / 0.05 | | | | | | |

- This data sheet according to VDI guideline 2198 only states the technical values of the standard truck. Different tyres, other masts, additional equipment etc. may result in different values.

| | | | | | | | | | | |
|---|---|---|---|---|---|---|---|---|---|---|
| Characteristic | 1.1 | Manufacturer (abbreviated description) | | | Jungheinrich | | | | | |
| | 1.2 | Manufacturer's type designation | | | AM I20 / I20p | | | | | |
| | 1.3 | Drive | | | Manual | | | | | |
| | 1.4 | Operation | | | Manual | | | | | |
| | 1.5 | Load capacity/load | Q | kg | 2000 | | | | | |
| | 1.6 | Load centre distance | c | mm | 570 | | 610 | | | |
| | 1.9 | Wheelbase | y | mm | 1165 | | 1245 | | | |
| Weights | 2.1 | tare weight | | kg | 72 | | | | 75 | |
| | 2.1.1 | Service weight (incl. battery) | | kg | 72 | | | | 75 | |
| Wheels/suspension system | 3.1 | Tyres | | | N-BN | V-BV | N-GN | V-GV | N-BN | V-BV |
| | 3.2 | Tyre size, front | | | Ø 200x50 | | | | | |
| | 3.3 | Tyre size, rear | | | Ø 80x65 | Ø 80x70 | Ø 80x90 | | Ø 80x65 | Ø 80x90 |
| | 3.5 | Wheels, number front/back (x=driven) | | | 2/2 | | | | | |
| | 3.6 | Tread width, front | b10 | mm | 120 | | | | | |
| | 3.7 | Tread width, rear | b11 | mm | 360 | | | | | |
| Basic dimensions | 4.4 | Lift (h3) | h3 | mm | 120 | | | | | |
| | 4.9 | Height of tiller handle in drive position min./max. | h14 | mm | 1170 | | | | | |
| | 4.14 | Stand height, elevated | h12 | mm | 200 | | | | | |
| | 4.15 | Height, lowered | h13 | mm | 85 | | | | | |
| | 4.19 | total length | l1 | mm | 1475 | | 1555 | | | |
| | 4.21.1 | total width | b1 | mm | 520 | | | | | |
| | 4.22 | Fork dimensions | s/e/l | mm | 51 x 160 x 1140 | | 51 x 160 x 1220 | | | |
| | 4.25 | Width across forks | b5 | mm | 520 | | | | | |
| | 4.32 | Ground clearance centre of wheelbase | m2 | mm | 38 | | | | | |
| | 4.34.1 | Aisle width (pallet 1000x1200 sideways) | Ast | mm | 1610 | | | | | |
| | 4.34.2 | Aisle width (pallet 800x1200 length) | Ast | mm | 1810 | | 1830 | | | |
| | 4.35 | Turning radius | Wa | mm | 1330 | | 1410 | | | |
| Performance data | 5.3 | Lowering speed laden/unladen | | m/s | 0.1 / 0.05 | | | | | |

- This data sheet according to VDI guideline 2198 only states the technical values of the standard truck. Different tyres, other masts, additional equipment etc. may result in different values.

| | | | | | | | | | | |
|---|---|---|---|---|---|---|---|---|---|---|
| Characteristic | 1.1 | Manufacturer (abbreviated description) | | | Jungheinrich | | | | | |
| | 1.2 | Manufacturer's type designation | | | AM I20 / I20p | | | | | |
| | 1.3 | Drive | | | Manual | | | | | |
| | 1.4 | Operation | | | Manual | | | | | |
| | 1.5 | Load capacity/load | Q | kg | 2000 | | | | | |
| | 1.6 | Load centre distance | c | mm | 405 | | | | 485 | |
| | 1.9 | Wheelbase | y | mm | 835 | | | | 995 | |
| Weights | 2.1 | tare weight | | kg | 65 | | 69 | | | |
| | 2.1.1 | Service weight (incl. battery) | | kg | 65 | | 69 | | | |
| Wheels/suspension system | 3.1 | Tyres | | | N-GN | V-GV | V-BV | N-BN | N-GN | V-GV |
| | 3.2 | Tyre size, front | | | Ø 200x50 | | | | | |
| | 3.3 | Tyre size, rear | | | Ø 80x90 | | Ø 80x70 | Ø 80x65 | Ø 80x90 | |
| | 3.5 | Wheels, number front/back (x=driven) | | | 2/2 | | | | | |
| | 3.6 | Tread width, front | b10 | mm | 120 | | | | | |
| | 3.7 | Tread width, rear | b11 | mm | 520 | | | | | |
| Basic dimensions | 4.4 | Lift (h3) | h3 | mm | 120 | | | | | |
| | 4.9 | Height of tiller handle in drive position min./max. | h14 | mm | 1170 | | | | | |
| | 4.14 | Stand height, elevated | h12 | mm | 200 | | | | | |
| | 4.15 | Height, lowered | h13 | mm | 85 | | | | | |
| | 4.19 | total length | l1 | mm | 1145 | | | | 1305 | |
| | 4.21.1 | total width | b1 | mm | 680 | | | | | |
| | 4.22 | Fork dimensions | s/ e/l | mm | 51 x 160 x 810 | | | | 51 x 160 x 970 | |
| | 4.25 | Width across forks | b5 | mm | 680 | | | | | |
| | 4.32 | Ground clearance centre of wheelbase | m2 | mm | 38 | | | | | |
| | 4.34.1 | Aisle width (pallet 1000×1200 sideways) | Ast | mm | 1610 | | | | | |
| | 4.34.2 | Aisle width (pallet 800x1200 length) | Ast | mm | 1810 | | | | | |
| | 4.35 | Turning radius | Wa | mm | 1000 | | | | 1160 | |
| Performance data | 5.3 | Lowering speed laden/unladen | | m/s | 0.1 / 0.05 | | | | | |

- This data sheet according to VDI guideline 2198 only states the technical values of the standard truck. Different tyres, other masts, additional equipment etc. may result in different values.

| | | | | | | | | | | |
|---|---|---|---|---|---|---|---|---|---|---|
| Characteristic | 1.1 | Manufacturer (abbreviated description) | | | Jungheinrich | | | | | |
| | 1.2 | Manufacturer's type designation | | | AM I20 / I20p | | | | | |
| | 1.3 | Drive | | | Manual | | | | | |
| | 1.4 | Operation | | | Manual | | | | | |
| | 1.5 | Load capacity/load | Q | kg | 2000 | | | | | |
| | 1.6 | Load centre distance | c | mm | 485 | | 570 | | | |
| | 1.9 | Wheelbase | y | mm | 995 | | 1165 | | | |
| Weights | 2.1 | tare weight | | kg | 72 | | 75 | | 78 | |
| | 2.1.1 | Service weight (incl. battery) | | kg | 72 | | 75 | | 78 | |
| Wheels/suspension system | 3.1 | Tyres | | | N-BN | V-BV | N-GN | V-GV | N-BN | V-BV |
| | 3.2 | Tyre size, front | | | Ø 200x50 | | | | | |
| | 3.3 | Tyre size, rear | | | Ø 80x65 | Ø 80x70 | Ø 80x90 | | Ø 80x65 | Ø 80x70 |
| | 3.5 | Wheels, number front/back (x=driven) | | | 2/2 | | | | | |
| | 3.6 | Tread width, front | b10 | mm | 120 | | | | | |
| | 3.7 | Tread width, rear | b11 | mm | 520 | | | | | |
| Basic dimensions | 4.4 | Lift (h3) | h3 | mm | 120 | | | | | |
| | 4.9 | Height of tiller handle in drive position min./max. | h14 | mm | 1170 | | | | | |
| | 4.14 | Stand height, elevated | h12 | mm | 200 | | | | | |
| | 4.15 | Height, lowered | h13 | mm | 85 | | | | | |
| | 4.19 | total length | l1 | mm | 1305 | | 1475 | | | |
| | 4.21.1 | total width | b1 | mm | 680 | | | | | |
| | 4.22 | Fork dimensions | s/e/l | mm | 51 x 160 x 970 | | 51 x 160 x 1140 | | | |
| | 4.25 | Width across forks | b5 | mm | 680 | | | | | |
| | 4.32 | Ground clearance centre of wheelbase | m2 | mm | 38 | | | | | |
| | 4.34.1 | Aisle width (pallet 1000x1200 sideways) | Ast | mm | 1610 | | | | | |
| | 4.34.2 | Aisle width (pallet 800x1200 length) | Ast | mm | 1810 | | | | | |
| | 4.35 | Turning radius | Wa | mm | 1160 | | 1330 | | | |
| Performance data | 5.3 | Lowering speed laden/unladen | | m/s | 0.1 / 0.05 | | | | | |

- This data sheet according to VDI guideline 2198 only states the technical values of the standard truck. Different tyres, other masts, additional equipment etc. may result in different values.

| | | | | | | | | |
|---|---|---|---|---|---|---|---|---|
| Characteristic | 1.1 | Manufacturer (abbreviated description) | | | Jungheinrich | | | |
| | 1.2 | Manufacturer's type designation | | | AM I20 / I20p | | | |
| | 1.3 | Drive | | | Manual | | | |
| | 1.4 | Operation | | | Manual | | | |
| | 1.5 | Load capacity/load | Q | kg | 2000 | | | |
| | 1.6 | Load centre distance | c | mm | 610 | | | |
| | 1.9 | Wheelbase | y | mm | 1245 | | | |
| Weights | 2.1 | tare weight | | kg | 78 | | | 81 |
| | 2.1.1 | Service weight (incl. battery) | | kg | 78 | | | 81 |
| Wheels/suspension system | 3.1 | Tyres | | | N-GN | V-GV | V-BV | N-BN |
| | 3.2 | Tyre size, front | | | Ø 200x50 | | | |
| | 3.3 | Tyre size, rear | | | Ø 80x90 | | | Ø 80x65 |
| | 3.5 | Wheels, number front/back (x=driven) | | | 2/2 | | | |
| | 3.6 | Tread width, front | b10 | mm | 120 | | | |
| | 3.7 | Tread width, rear | b11 | mm | 520 | | | |
| Basic dimensions | 4.4 | Lift (h3) | h3 | mm | 120 | | | |
| | 4.9 | Height of tiller handle in drive position min./max. | h14 | mm | 1170 | | | |
| | 4.14 | Stand height, elevated | h12 | mm | 200 | | | |
| | 4.15 | Height, lowered | h13 | mm | 85 | | | |
| | 4.19 | total length | l1 | mm | 1555 | | | |
| | 4.21.1 | total width | b1 | mm | 680 | | | |
| | 4.22 | Fork dimensions | s/ e/l | mm | 51 x 160 x 1220 | | | |
| | 4.25 | Width across forks | b5 | mm | 680 | | | |
| | 4.32 | Ground clearance centre of wheelbase | m2 | mm | 38 | | | |
| | 4.34.1 | Aisle width (pallet 1000x1200 sideways) | Ast | mm | 1610 | | | |
| | 4.34.2 | Aisle width (pallet 800x1200 length) | Ast | mm | 1830 | | | |
| | 4.35 | Turning radius | Wa | mm | 1410 | | | |
| Performance data | 5.3 | Lowering speed laden/unladen | | m/s | 0.1 / 0.05 | | | |

- This data sheet according to VDI guideline 2198 only states the technical values of the standard truck. Different tyres, other masts, additional equipment etc. may result in different values.

The German production facilities in Norderstedt, Moosburg and Landsberg are certified as well as our Genuine Parts Center in Kaltenkirchen.

ISO 9001
ISO 14001

JUNGHEINRICH