# Electric tow tractor

## EZS 350

Towing capacity: 5000 kg

LI ION technology

JUNGHEINRICH

# EZS 350

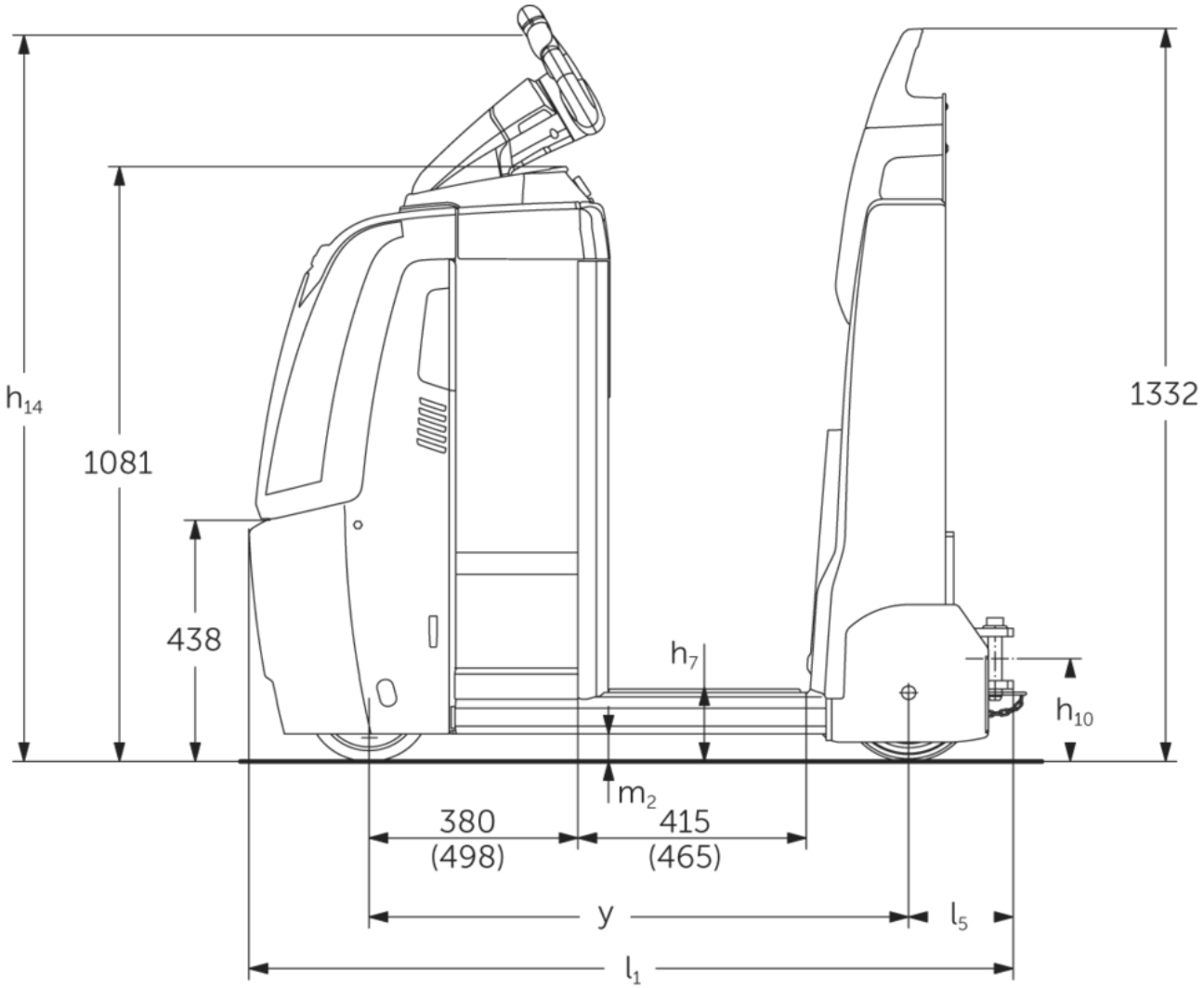


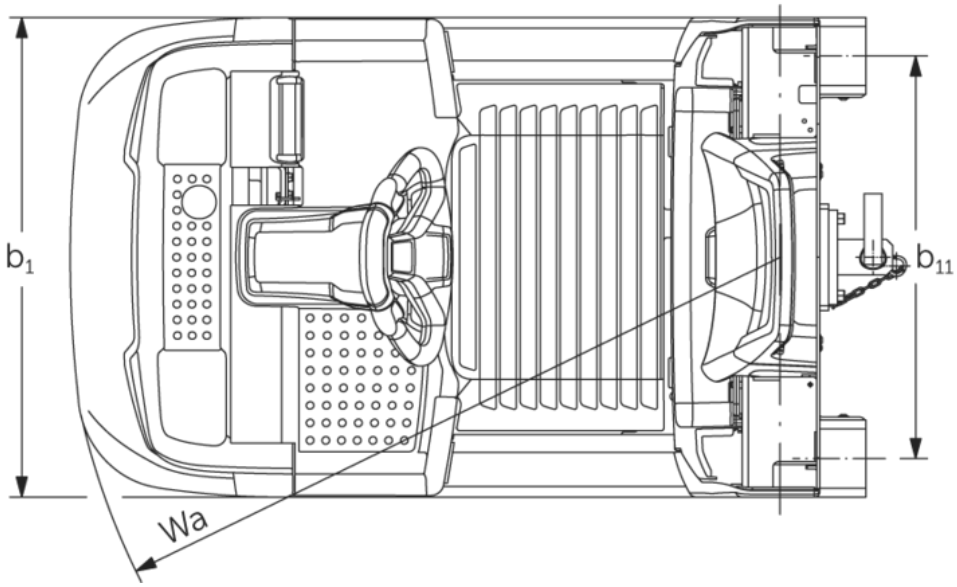

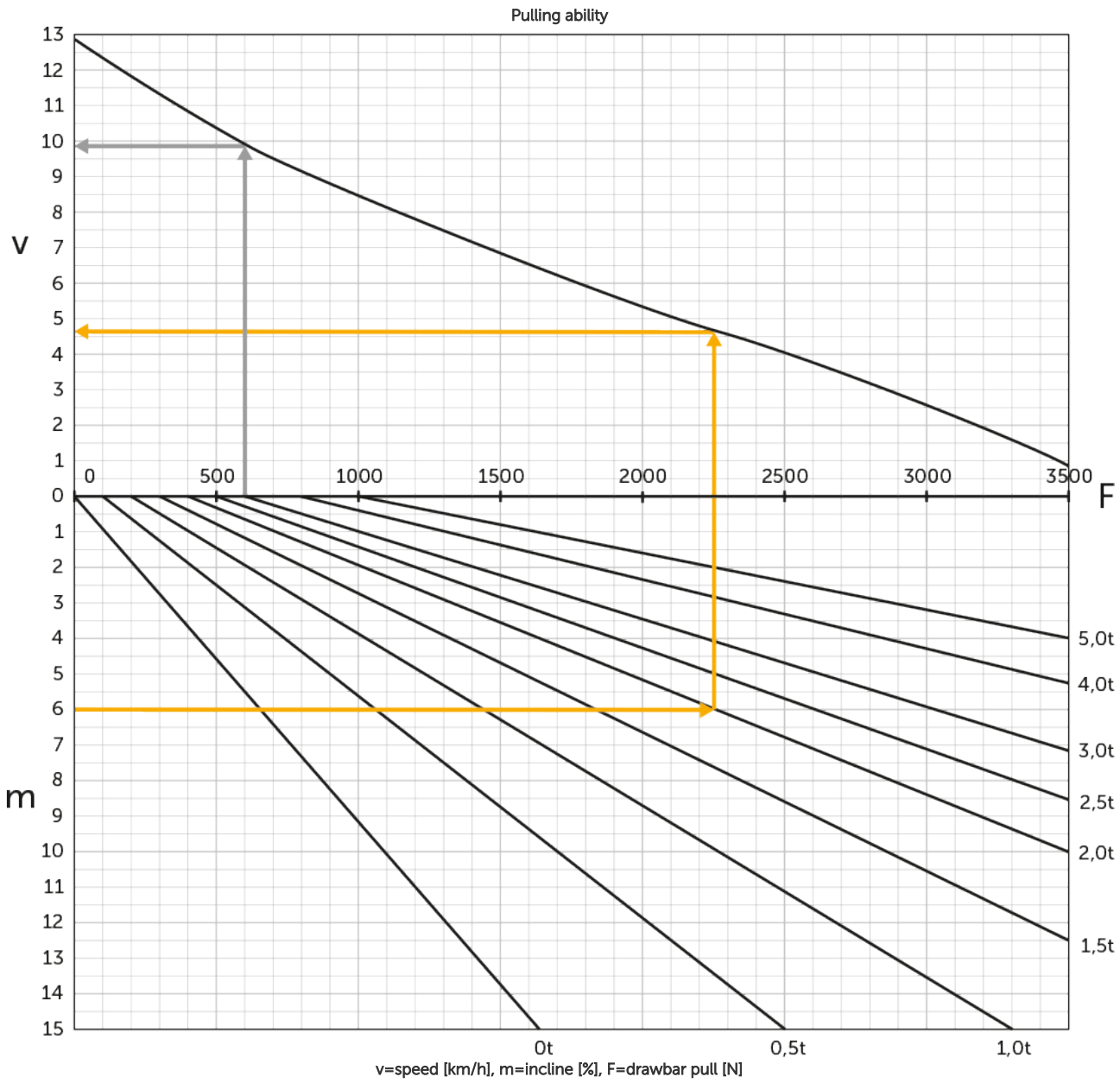
Pulling ability
v
m
F
0
500
1000
1500
2000
2500
3000
3500
5,0t
4,0t
3,0t
2,5t
2,0t
1,5t
0t
0,5t
1,0t
v=speed [km/h], m=incline [%], F=drawbar pull [N]

# VDI table

| | | | | | | | | |
|---|---|---|---|---|---|---|---|---|
| Characteristic | 1.1 | Manufacturer (abbreviated description) | | | Jungheinrich | | | |
| | 1.2 | Manufacturer's type designation | | | EZS 350 L Std | EZS 350 L Comfort | EZS 350 XL Std | EZS 350 XL Comfort |
| | 1.3 | Drive type | | | electric | | | |
| | 1.4 | Operation | | | Stand-on | | | |
| | 1.5.3 | Towing capacity | Q | kg | 5000 | | | |
| | 1.7 | Rated drawbar pull | | N | 1000 | | | |
| | 1.9 | Wheelbase | y | mm | 980 | 1030 | 1098 | 1148 |
| Weights | 2.1.1 | Service weight (incl. battery) | | kg | 996 | 1006 | 1091 | 1101 |
| | 2.3 | Axle load unladen front/rear | | kg | 505 / 491 | 510 / 496 | 565 / 526 | 570 / 531 |
| Wheels/chassis | 3.1 | Tyres | | | Polyurethane / Super-elastic | | | |
| | 3.2 | Tyre size, front | | | ø230 x 77 | | | |
| | 3.3 | Tyre size, rear | | | ø250 x 80 | | | |
| | 3.5 | Wheels, number front/back (x=driven) | | | 1x/2 | | | |
| | 3.7 | Tread width, rear | b11 | mm | 680 | | | |
| Basic dimensions | 4.8 | Seat height/stand height | h7 | mm | 135 | | | |
| | 4.9 | Height of tiller handle in drive position min./ max. | h14 | mm | 1320 | | | |
| | 4.12 | Coupling height | h10 | mm | 158 | | | |
| | 4.19 | Total length | l1 | mm | 1390 | 1440 | 1508 | 1558 |
| | 4.21.1 | total width | b1 | mm | 810 | | | |
| | 4.32 | Ground clearance centre of wheelbase | m2 | mm | 50 | | | |
| | 4.35 | Turning radius | Wa | mm | 1210 | 1260 | 1328 | 1378 |
| Performance data | 5.1 | Travel speed laden/unladen | | km/h | 8 / 12.5 | | | |
| | 5.1.1 | Reverse travel speed with/without load | | km/h | 6 / 6 | | | |
| | 5.5 | Drawbar pull laden | | N | 1000 | | | |
| | 5.6 | Max. drawbar pull laden/unladen | | N | 3700 / 3700 | | | |
| | 5.10 | Service brake | | | electromagnetic/generative | | | |
| Electric motor/electronics | 6.1 | Drive motor, performance S2 60 min | | kW | 2.8 | | | |
| | 6.4 | Battery voltage/nominal capacity | | V / Ah | 24 / 465 | | 24 / 620 | |
| | 6.5 | Battery weight | | kg | 370 | | 470 | |
| | 6.6.1 | Energy consumption according to EN cycle | | kWh/h | 1.15 | | | |
| | 6.6.2 | CO2 equivalent as per EN 16796 | | kg/h | 0.6 | | | |

| | | | | |
|---|---|---|---|---|
| Other | 8.1 | Type of drive control | | AC speedCONTROL |
| | 10.7 | Sound pressure level according to EN12053 | dB (A) | 66 |

- This data sheet according to VDI guideline 2198 only states the technical values of the standard truck. Different tyres, other masts, additional equipment etc. may result in different values.

- VDI no. 4.9: the height applies to the version with jetPILOT
- VDI no. 4.12: the value for the coupling height applies to a single plug-in coupling. Other coupling heights are available
- VDI no. 4.19: as different coupling systems are available, the specification applies to the overall length including a single plug-in coupling
- VDI no. 5.1: see tow load diagram
- VDI no. 5.5: this value is the rated drawbar pull
- VDI no. 5.6: see tow load diagram

The German production facilities in Norderstedt, Moosburg and Landsberg are certified as well as our Genuine Parts Center in Kaltenkirchen.

ISO 9001
ISO 14001

Jungheinrich fork lift trucks meet European safety requirements.

CE

JUNGHEINRICH