Electric pedestrian stacker

ERC 214bi-216bi

Lift height: 2400-6000 mm / Load capacity: 1400-1600 kg

LI-ION technology

JUNGHEINRICH

ERC 214bi-216bi

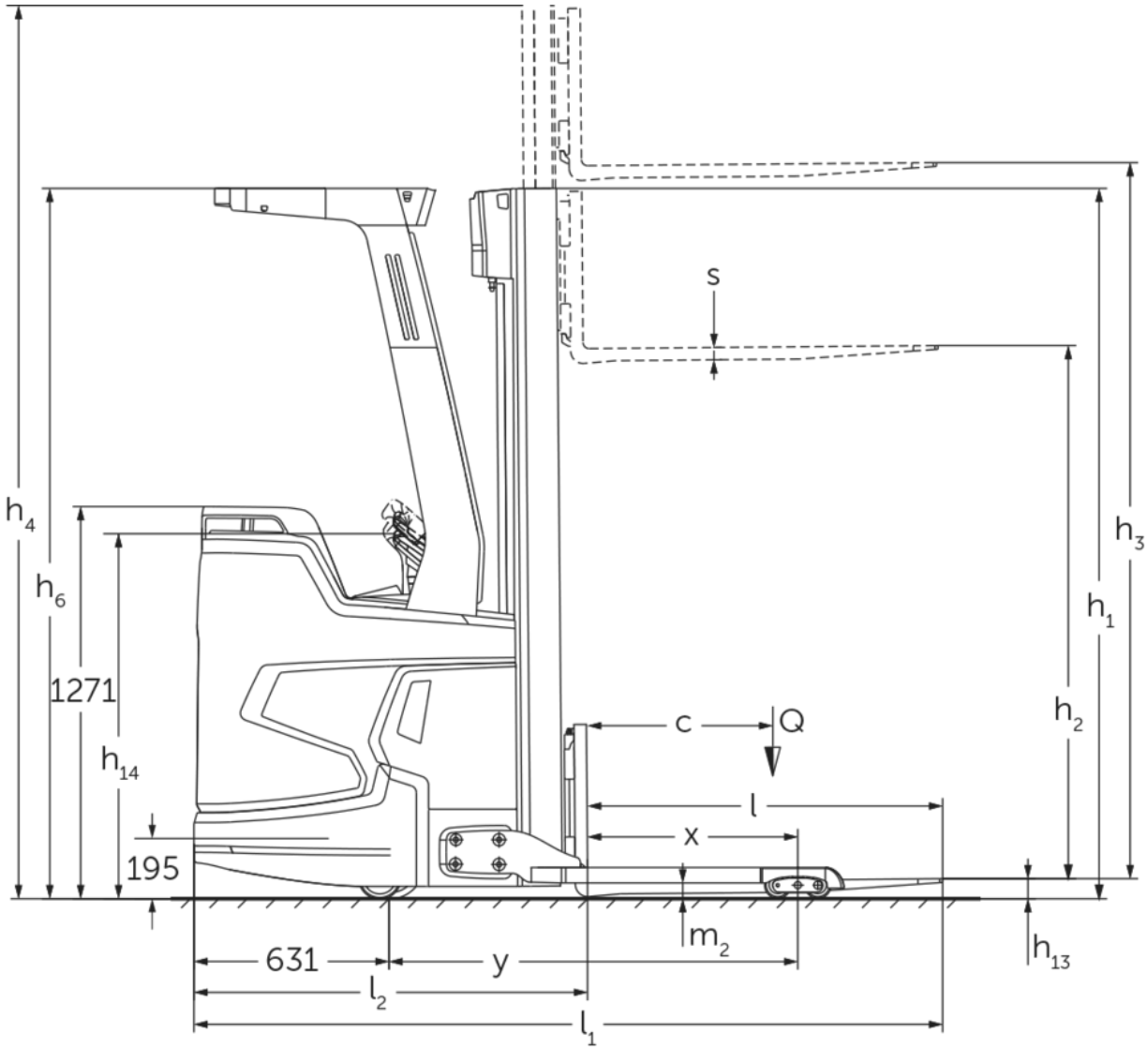

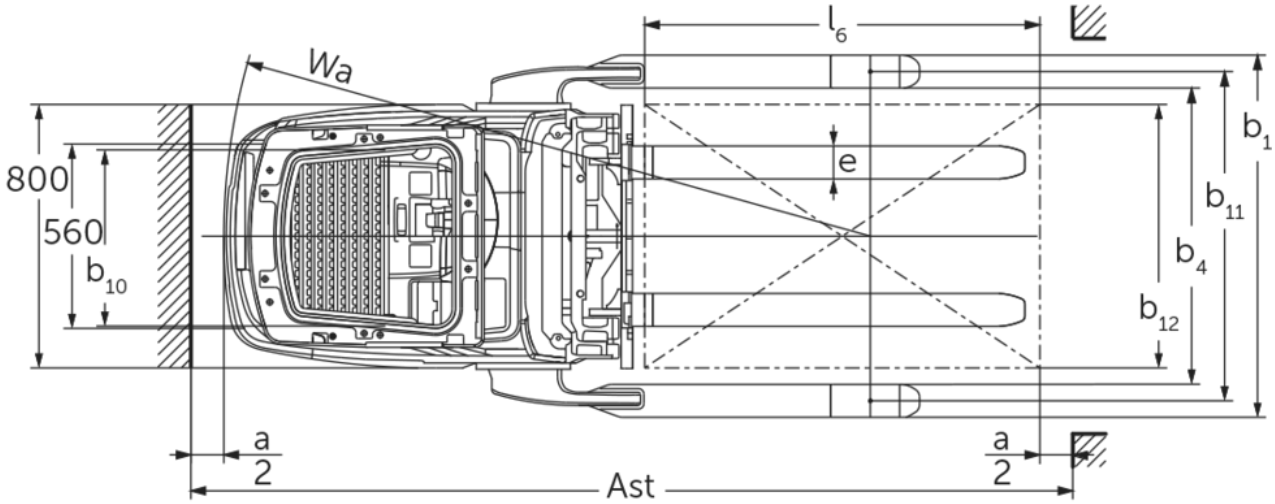

ERC 214bi-216bi

ERC 214bi	Lift (h3)	Retracted mast height (h1)	Free lift (h2)	Extended mast height (h4)
Duplex mast ZT	2500 mm	1800 mm	100 mm	3025 mm
	2760 mm	1930 mm	100 mm	3285 mm
	2900 mm	2000 mm	100 mm	3425 mm
	3160 mm	2130 mm	100 mm	3685 mm
	3600 mm	2350 mm	100 mm	4125 mm
	4100 mm	2600 mm	100 mm	4625 mm
	4300 mm	2700 mm	100 mm	4825 mm
Triplex mast DZ	4090 mm	1880 mm	1348 mm	4622 mm
	4300 mm	1950 mm	1418 mm	4832 mm
	4690 mm	2080 mm	1548 mm	5222 mm
	5350 mm	2300 mm	1768 mm	5882 mm
ERC 214bi, ERC 216bi	**Lift (h3)**	**Retracted mast height (h1)**	**Free lift (h2)**	**Extended mast height (h4)**
Triplex mast DZ	6000 mm	2550 mm	1968 mm	6582 mm
ERC 216bi	**Lift (h3)**	**Retracted mast height (h1)**	**Free lift (h2)**	**Extended mast height (h4)**
Duplex mast ZT	2400 mm	1800 mm	100 mm	2975 mm
	2660 mm	1930 mm	100 mm	3235 mm
	2800 mm	2000 mm	100 mm	3375 mm
	3060 mm	2130 mm	100 mm	3635 mm
	3500 mm	2350 mm	100 mm	4075 mm
	4000 mm	2600 mm	100 mm	4575 mm
	4200 mm	2700 mm	100 mm	4775 mm
Triplex mast DZ	3990 mm	1880 mm	1298 mm	4572 mm
	4200 mm	1950 mm	1368 mm	4782 mm
	4590 mm	2080 mm	1498 mm	5172 mm
	5250 mm	2300 mm	1718 mm	5832 mm

VDI table

Characteristic	1.1	Manufacturer (abbreviated description)			Jungheinrich	
	1.2	Manufacturer's type designation			ERC 2bi (2020)	
	1.3	Drive			Electric	
	1.4	Operation			Operator platform	
	1.5	Load capacity/load	Q	kg	1400	1600
	1.6	Load centre distance	c	mm	600	
	1.8	Load distance, centre of drive axle to fork	x	mm	681	
	1.9	Wheelbase	y	mm	1324	
Weights	2.1.1	Service weight (incl. battery)		kg	1500	1510
	2.2	Axle load laden front/rear		kg	1215 / 1685	1230 / 1880
	2.3	Axle load unladen front/rear		kg	1145 / 355	1150 / 360
Wheels/suspension system	3.1	Tyres			Polyurethane (PU)	
	3.2	Tyre size, front			Ø 230 x 77	
	3.3	Tyre size, rear			Ø 85 x 75	
	3.4	Additional wheels			Ø 140 x 57	
	3.5	Wheels, number front/back (x=driven)			1x + 1 / 4	
	3.6	Tread width, front	b10	mm	535	
	3.7	Tread width, rear	b11	mm	1000	
	3.7.1	2. Tread width, rear		mm	1170	
	3.7.2	3. Tread width, rear		mm	1370	
Basic dimensions	4.2	Retracted mast height (h1)	h1	mm	2300	
	4.3	Free lift (h2)	h2	mm	1768	1718
	4.4	Lift (h3)	h3	mm	5350	5250
	4.5	Extended mast height (h4)	h4	mm	5882	5832
	4.7	Height of overhead guard (cab)	h6	mm	2300	
	4.9	Height of tiller handle in drive position min./max.	h14	mm	1185 / 1245	
	4.19	total length	l1	mm	2425	
	4.20	Length including fork shank	l2	mm	1274	
	4.21.1	total width	b1	mm	1100	
	4.22	Fork dimensions	s/e/l	mm	40 x 100 x 1150	
	4.24	Fork carriage width	b3	mm	800	
	4.32	Ground clearance centre of wheelbase	m2	mm	50	
	4.34.1	Aisle width (pallet 1000×1200 sideways)	Ast	mm	2632	
	4.34.2	Aisle width (pallet 800x1200 length)	Ast	mm	2682	
	4.35	Turning radius	Wa	mm	1963	
Performance data	5.1	Travel speed laden/unladen		km/h	9 / 12	
	5.2	Lift speed laden/unladen		m/s	0.19 / 0.35	
	5.3	Lowering speed laden/unladen		m/s	0.43 / 0.49	
	5.8	Max. gradeability laden/unladen		%	8 / 16	
	5.10	Service brake			generative	

E-motor/Electronics	6.1	Drive motor, performance S2 60 min	kW	3.2
	6.2	Lift motor, performance with S3	kW	3
	6.3	Battery according to DIN 43531/35/36		Jungheinrich Li-ion
	6.4	Battery voltage/nominal capacity	V / Ah	24 / 260
	6.5	Battery weight	kg	98
	6.6	Energy consumption according to VDI cycle	kWh/h	0
	6.6.1	Energy consumption according to EN cycle	kWh/h	0.96
	6.6.2	CO2 equivalent as per EN 16796	kg/h	0.5
	6.7	Throughput	t/h	83
	6.8.1	Energy consumption with max. throughput	kWh/h	2.31
Other	8.1	Type of drive control		AC
	10.7	Sound pressure level according to EN12053	dB (A)	68

- This data sheet according to VDI guideline 2198 only states the technical values of the standard truck. Different tyres, other masts, additional equipment etc. may result in different values.

The values in the table apply for the 260-Ah Li-ion battery, DZ 5350 / DZ 5250 mast, fork length 1,150 mm, with overhead guard, without bumper.

- VDI no. 1.8: with duplex telescopic mast: x + 32 mm
- VDI no. 4.19: with duplex telescopic mast: l1 - 32 mm
- VDI no. 4.20: with duplex telescopic mast: l2 - 32 mm
- VDI no. 4.21: depending on tread width: 1,100 / 1,270 / 1,470 mm
- VDI no. 4.24: available fork carrier widths: ISO 2A 800 / 975 mm
- VDI no. 4.34.1: diagonal as per VDI, depending on tread width: aisle width + 211 / + 211 / + 273 mm; with duplex telescopic mast: aisle width - 32 mm
- VDI no. 4.34.2: diagonal as per VDI, depending on tread width: aisle width + 136 / + 136 / + 223 mm; with duplex telescopic mast: aisle width - 32 mm
- VDI no. 6.2: with S3 = 11%
- VDI no. 6.5: with 130-Ah battery = 76 kg

The German production facilities in Norderstedt, Moosburg and Landsberg are certified as well as our Genuine Parts Center in Kaltenkirchen.

ISO 9001
ISO 14001

Jungheinrich fork lift trucks meet European safety requirements.

CE

JUNGHEINRICH