Hand pallet truck

AM l20 / l20p

Lift height: 120 mm / Load capacity: 2000 kg

JUNGHEINRICH

AM l20 / l20p

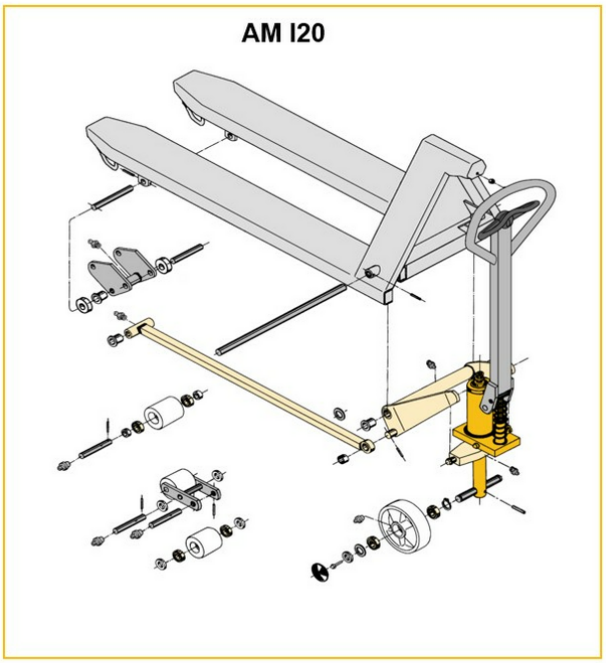

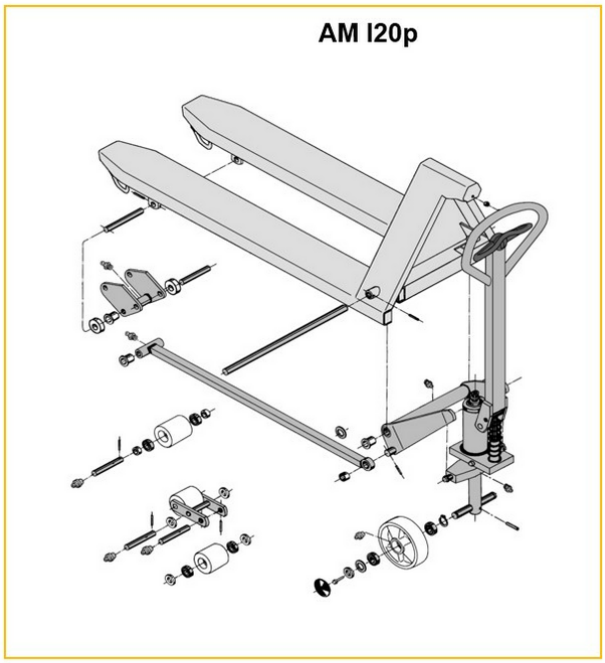

Inox AISI 316 (V4A)	Feuerverzinkt
Inox AISI 303/304 (V2A)	Verzinkt und gelb chromatiert

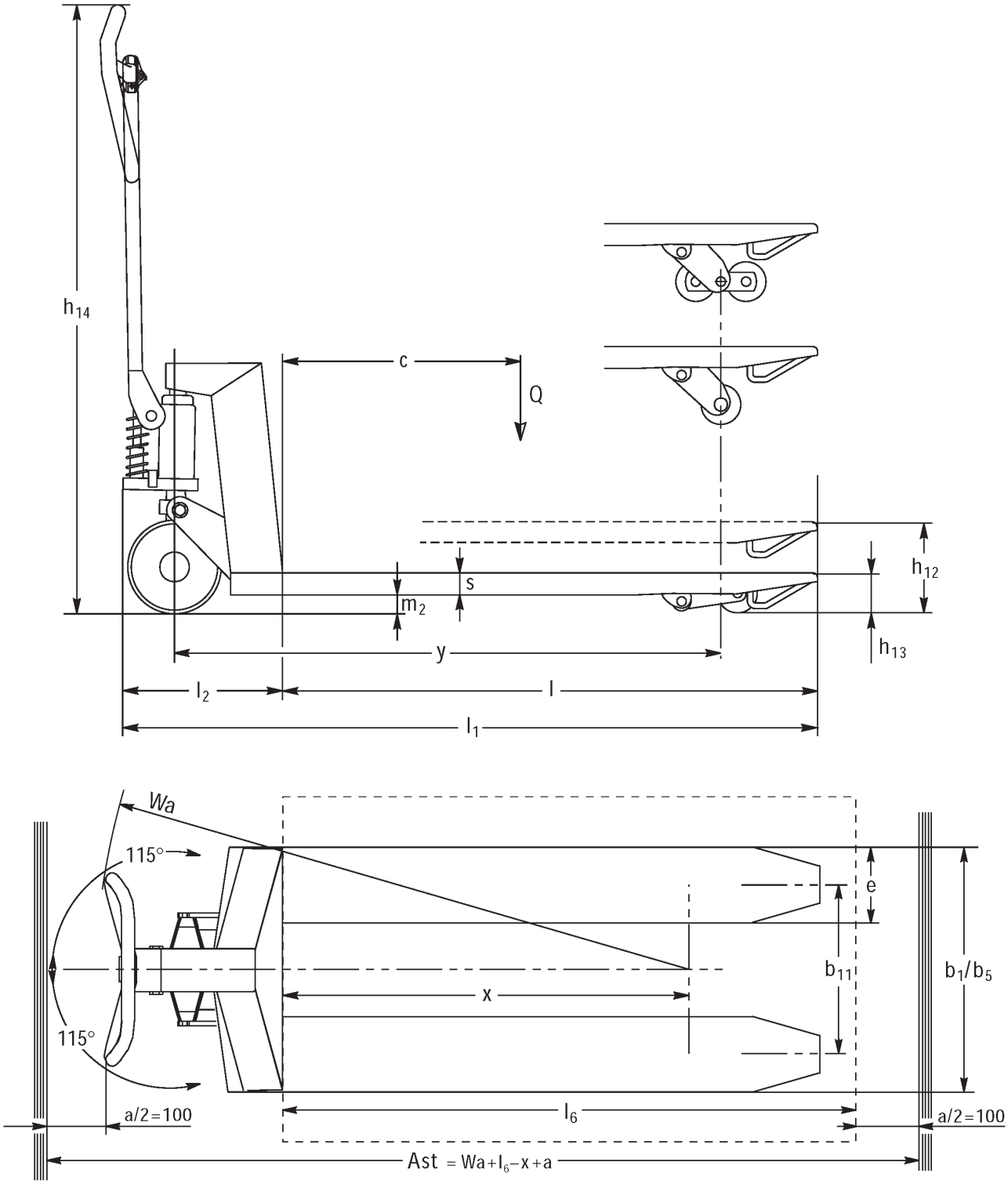
h14
c
Q
s
m2
h12
h13
y
l2
l
l1
Wa
115°
115°
e
b11
b1/b5
x
l6
a/2=100
a/2=100
Ast = Wa+l6−x+a

AM 120

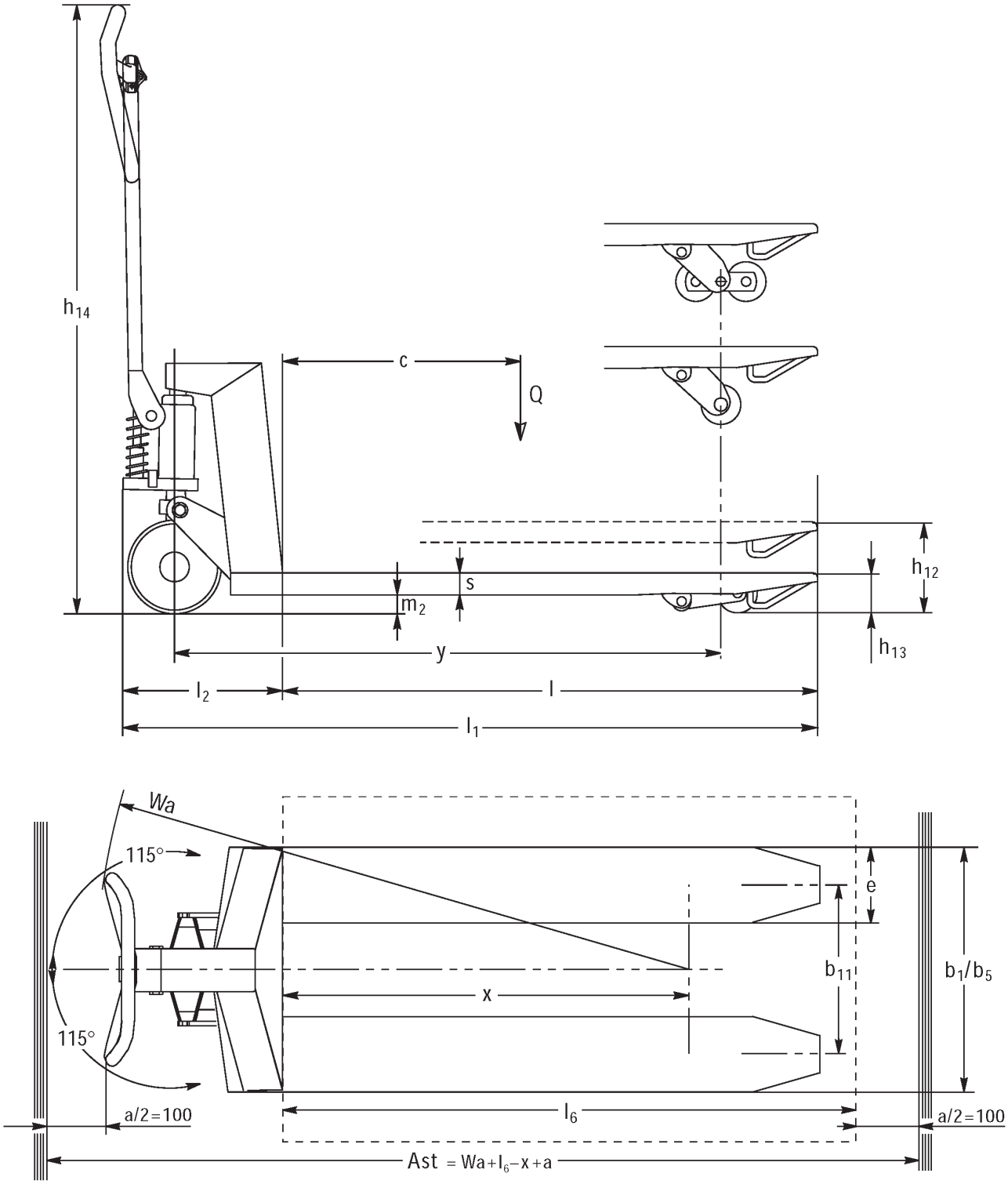
h14
c
Q
s
m2
h12
h13
y
l2
l
l1
Wa
115°
115°
e
b11
b1/b5
x
l6
a/2=100
a/2=100
Ast = Wa+l6−x+a

AM 120p

VDI table

Characteristic	1.1	Manufacturer (abbreviated description)			Other (OEM)							
	1.2	Manufacturer's type designation			AM I20p							
	1.3	Drive type			Manual							
	1.4	Operation			Manual							
	1.5	Load capacity/load	Q	kg	2000							
	1.6	Load centre distance	c	mm	610				570			
	1.9	Wheelbase	y	mm	1245				1165			
Weights	2.1	Netto weight		kg	81		78				75	
	2.1.1	Service weight (incl. battery)		kg	81		78		-			
Wheels/chassis	3.1	Tyres			V-BV	N-BN	V-GV	N-GN	V-BV	N-BN	C-GV	N-GN
	3.2	Tyre size, front			Ø 200x50							
	3.3	Tyre size, rear			Ø 80x70	Ø 80x65	Ø 80x90		Ø 80x70	Ø 80x65	Ø 80x90	
	3.5	Wheels, number front/back (x=driven)			2/2							
	3.6	Tread width, front	b10	mm	120							
	3.7	Tread width, rear	b11	mm	520							
Basic dimensions	4.4	Lift (h3)	h3	mm	120							
	4.9	Height of tiller handle in drive position min./max.	h14	mm	1170							
	4.14	Stand height, elevated	h12	mm	205							
	4.15	Height, lowered	h13	mm	85							
	4.19	Total length	l1	mm	1555				1475			
	4.21.1	total width	b1	mm	680							
	4.22	Fork dimensions	s/e/l	mm	51 x 160 x 1220				51 x 160 x 1140			
	4.25	Width across forks	b5	mm	680							
	4.32	Ground clearance centre of wheelbase	m2	mm	34							
	4.34.1	Aisle width (pallet 1000×1200 sideways)	Ast	mm	1610							
	4.34.2	Aisle width (pallet 800x1200 length)	Ast	mm	1830				1810			
	4.35	Turning radius	Wa	mm	1410				1330			
Performance data	5.3	Lowering speed laden/unladen		m/s	0.1 / 0.05							

- This data sheet according to VDI guideline 2198 only states the technical values of the standard truck. Different tyres, other masts, additional equipment etc. may result in different values.

Characteristic	1.1	Manufacturer (abbreviated description)			Other (OEM)							
	1.2	Manufacturer's type designation			AM I20p							
	1.3	Drive type			Manual							
	1.4	Operation			Manual							
	1.5	Load capacity/load	Q	kg	2000							
	1.6	Load centre distance	c	mm	485				405			
	1.9	Wheelbase	y	mm	995				835			
Weights	2.1	Netto weight		kg	72		69				65	
	2.1.1	Service weight (incl. battery)		kg	72		69	66	-			
Wheels/chassis	3.1	Tyres			V-BV	N-BN	V-GV	N-GN	V-BV	N-BN	V-GV	N-GN
	3.2	Tyre size, front			Ø 200x50							
	3.3	Tyre size, rear			Ø 80x70	Ø 80x65	Ø 80x90		Ø 80x70	Ø 80x65	Ø 80x90	
	3.5	Wheels, number front/back (x=driven)			2/2							
	3.6	Tread width, front	b10	mm	120							
	3.7	Tread width, rear	b11	mm	520							
Basic dimensions	4.4	Lift (h3)	h3	mm	120							
	4.9	Height of tiller handle in drive position min./max.	h14	mm	1170							
	4.14	Stand height, elevated	h12	mm	205							
	4.15	Height, lowered	h13	mm	85							
	4.19	Total length	l1	mm	1305				1145			
	4.21.1	total width	b1	mm	680							
	4.22	Fork dimensions	s/ e/l	mm	51 x 160 x 970				51 x 160 x 810			
	4.25	Width across forks	b5	mm	680							
	4.32	Ground clearance centre of wheelbase	m2	mm	34							
	4.34.1	Aisle width (pallet 1000×1200 sideways)	Ast	mm	1610							
	4.34.2	Aisle width (pallet 800x1200 length)	Ast	mm	1810							
	4.35	Turning radius	Wa	mm	1160				1000			
Performance data	5.3	Lowering speed laden/unladen		m/s	0.1 / 0.05							

- This data sheet according to VDI guideline 2198 only states the technical values of the standard truck. Different tyres, other masts, additional equipment etc. may result in different values.

Characteristic	1.1	Manufacturer (abbreviated description)			Other (OEM)							
	1.2	Manufacturer's type designation			AM I20p							
	1.3	Drive type			Manual							
	1.4	Operation			Manual							
	1.5	Load capacity/load	Q	kg	2000							
	1.6	Load centre distance	c	mm	610				570			
	1.9	Wheelbase	y	mm	1245				1165			
Weights	2.1	Netto weight		kg	75		72				69	
	2.1.1	Service weight (incl. battery)		kg	75		72		-			
	2.2	Axle load laden front/rear		-	- / -							636 / 1432
	2.3	Axle load unladen front/rear		-	- / -							21 / 47
Wheels/chassis	3.1	Tyres			V-BV	N-BN	V-GV	N-GN	V-BV	N-BN	V-GV	N-GN
	3.2	Tyre size, front			Ø 200x50							
	3.3	Tyre size, rear			Ø 80x70	Ø 80x65	Ø 80x90		Ø 80x70	Ø 80x65	Ø 80x90	
	3.5	Wheels, number front/back (x=driven)			2/2							
	3.6	Tread width, front	b10	mm	120							
	3.7	Tread width, rear	b11	mm	360							
Basic dimensions	4.4	Lift (h3)	h3	mm	120							
	4.9	Height of tiller handle in drive position min./max.	h14	mm	1170							1220 / 1170
	4.14	Stand height, elevated	h12	mm	205							
	4.15	Height, lowered	h13	mm	85							
	4.19	Total length	l1	mm	1555				1475			
	4.20	Length including fork shank	l2	mm	-							340
	4.21.1	total width	b1	mm	520							
	4.22	Fork dimensions	s/ e/l	mm	51 x 160 x 1220				51 x 160 x 1140			
	4.25	Width across forks	b5	mm	520							
	4.32	Ground clearance centre of wheelbase	m2	mm	34							
	4.34.1	Aisle width (pallet 1000×1200 sideways)	Ast	mm	1610							
	4.34.2	Aisle width (pallet 800x1200 length)	Ast	mm	1830				1810			
	4.35	Turning radius	Wa	mm	1410				1330			
Performance data	5.3	Lowering speed laden/unladen		m/s	0.1 / 0.05							

- This data sheet according to VDI guideline 2198 only states the technical values of the standard truck. Different tyres, other masts, additional equipment etc. may result in different values.

Characteristic	1.1	Manufacturer (abbreviated description)			Other (OEM)							
	1.2	Manufacturer's type designation			AM I20p							
	1.3	Drive type			Manual							
	1.4	Operation			Manual							
	1.5	Load capacity/load	Q	kg	2000							
	1.6	Load centre distance	c	mm	485				405			
	1.9	Wheelbase	y	mm	995				835			
Weights	2.1	Netto weight		kg	66		63				59	
	2.1.1	Service weight (incl. battery)		kg	66		63		-			
Wheels/chassis	3.1	Tyres			V-BV	N-BN	V-GV	N-GN	V-BV	N-BN	V-GV	N-GN
	3.2	Tyre size, front			Ø 200x50							
	3.3	Tyre size, rear			Ø 80x70	Ø 80x65	Ø 80x90		Ø 80x70	Ø 80x65	Ø 80x90	
	3.5	Wheels, number front/back (x=driven)			2/2							
	3.6	Tread width, front	b10	mm	120							
	3.7	Tread width, rear	b11	mm	360				335			360
Basic dimensions	4.4	Lift (h3)	h3	mm	120							
	4.9	Height of tiller handle in drive position min./max.	h14	mm	1170							
	4.14	Stand height, elevated	h12	mm	205							
	4.15	Height, lowered	h13	mm	85							
	4.19	Total length	l1	mm	1305				1145			
	4.21.1	total width	b1	mm	520							
	4.22	Fork dimensions	s/ e/l	mm	51 x 160 x 970				51 x 160 x 810			
	4.25	Width across forks	b5	mm	520							
	4.32	Ground clearance centre of wheelbase	m2	mm	34							
	4.34.1	Aisle width (pallet 1000×1200 sideways)	Ast	mm	1610							
	4.34.2	Aisle width (pallet 800x1200 length)	Ast	mm	1810							
	4.35	Turning radius	Wa	mm	1160				1000			
Performance data	5.3	Lowering speed laden/unladen		m/s	0.1 / 0.05							

- This data sheet according to VDI guideline 2198 only states the technical values of the standard truck. Different tyres, other masts, additional equipment etc. may result in different values.

Characteristic	1.1	Manufacturer (abbreviated description)			Other (OEM)								
	1.2	Manufacturer's type designation			AM I20								
	1.3	Drive type			Manual								
	1.4	Operation			Manual								
	1.5	Load capacity/load	Q	kg	2000								
	1.6	Load centre distance	c	mm	405				485				
	1.9	Wheelbase	y	mm	835				995				
Weights	2.1	Netto weight		kg	59		63				66		
	2.1.1	Service weight (incl. battery)		kg	59		63				66		
Wheels/chassis	3.1	Tyres			N-GN	V-GV	N-BN	V-BV	N-GN	V-GV	N-BN	V-BV	
	3.2	Tyre size, front			Ø 200x50								
	3.3	Tyre size, rear			Ø 80x90		Ø 80x65	Ø 80x70	Ø 80x90		Ø 80x65	Ø 80x70	
	3.5	Wheels, number front/back (x=driven)			2/2								
	3.6	Tread width, front	b10	mm	120								
	3.7	Tread width, rear	b11	mm	360								
Basic dimensions	4.4	Lift (h3)	h3	mm	120								
	4.9	Height of tiller handle in drive position min./max.	h14	mm	1170								
	4.14	Stand height, elevated	h12	mm	200								
	4.15	Height, lowered	h13	mm	85								
	4.19	Total length	l1	mm	1145				1305				
	4.21.1	total width	b1	mm	520								
	4.22	Fork dimensions	s/ e/l	mm	51 x 160 x 810				51 x 160 x 970				
	4.25	Width across forks	b5	mm	520								
	4.32	Ground clearance centre of wheelbase	m2	mm	34	38							
	4.34.1	Aisle width (pallet 1000×1200 sideways)	Ast	mm	1610								
	4.34.2	Aisle width (pallet 800x1200 length)	Ast	mm	1810								
	4.35	Turning radius	Wa	mm	1000				1160				
Performance data	5.3	Lowering speed laden/unladen		m/s	0.1 / 0.05								

- This data sheet according to VDI guideline 2198 only states the technical values of the standard truck. Different tyres, other masts, additional equipment etc. may result in different values.

Characteristic	1.1	Manufacturer (abbreviated description)			Other (OEM)							
	1.2	Manufacturer's type designation			AM I20							
	1.3	Drive type			Manual							
	1.4	Operation			Manual							
	1.5	Load capacity/load	Q	kg	2000							
	1.6	Load centre distance	c	mm	570				610			
	1.9	Wheelbase	y	mm	1165				1245			
Weights	2.1	Netto weight		kg	69		72				75	
	2.1.1	Service weight (incl. battery)		kg	69		72				75	
	2.2	Axle load laden front/rear		kg	636 / 1432	- / -						
	2.3	Axle load unladen front/rear		kg	21 / 47	- / -						
Wheels/chassis	3.1	Tyres			N-GN	V-GV	N-BN	V-BV	N-GN	V-GV	N-BN	V-BV
	3.2	Tyre size, front			Ø 200x50							
	3.3	Tyre size, rear			Ø 80x90		Ø 80x65	Ø 80x70	Ø 80x90		Ø 80x65	Ø 80x90
	3.5	Wheels, number front/back (x=driven)			2/2							
	3.6	Tread width, front	b10	mm	120							
	3.7	Tread width, rear	b11	mm	360							
Basic dimensions	4.4	Lift (h3)	h3	mm	120							
	4.9	Height of tiller handle in drive position min./max.	h14	mm	1170							
	4.14	Stand height, elevated	h12	mm	200							
	4.15	Height, lowered	h13	mm	85							
	4.19	Total length	l1	mm	1475				1555			
	4.20	Length including fork shank	l2	mm	340	-						
	4.21.1	total width	b1	mm	520							
	4.22	Fork dimensions	s/ e/l	mm	51 x 160 x 1140				51 x 160 x 1220			
	4.25	Width across forks	b5	mm	520							
	4.32	Ground clearance centre of wheelbase	m2	mm	38							
	4.34.1	Aisle width (pallet 1000×1200 sideways)	Ast	mm	1610							
	4.34.2	Aisle width (pallet 800x1200 length)	Ast	mm	1810				1830			
	4.35	Turning radius	Wa	mm	1330				1410			
Performance data	5.3	Lowering speed laden/unladen		m/s	0.1 / 0.05							

- This data sheet according to VDI guideline 2198 only states the technical values of the standard truck. Different tyres, other masts, additional equipment etc. may result in different values.

Characteristic	1.1	Manufacturer (abbreviated description)			Other (OEM)							
	1.2	Manufacturer's type designation			AM I20							
	1.3	Drive type			Manual							
	1.4	Operation			Manual							
	1.5	Load capacity/load	Q	kg	2000							
	1.6	Load centre distance	c	mm	405				485			
	1.9	Wheelbase	y	mm	835				995			
Weights	2.1	Netto weight		kg	65		69				72	
	2.1.1	Service weight (incl. battery)		kg	65		69				72	
Wheels/chassis	3.1	Tyres			N-GN	V-GV	V-BV	N-BN	N-GN	V-GV	N-BN	V-BV
	3.2	Tyre size, front			Ø 200x50							
	3.3	Tyre size, rear			Ø 80x90		Ø 80x70	Ø 80x65	Ø 80x90		Ø 80x65	Ø 80x70
	3.5	Wheels, number front/back (x=driven)			2/2							
	3.6	Tread width, front	b10	mm	120							
	3.7	Tread width, rear	b11	mm	520							
Basic dimensions	4.4	Lift (h3)	h3	mm	120							
	4.9	Height of tiller handle in drive position min./max.	h14	mm	1170							
	4.14	Stand height, elevated	h12	mm	200							
	4.15	Height, lowered	h13	mm	85							
	4.19	Total length	l1	mm	1145				1305			
	4.21.1	total width	b1	mm	680							
	4.22	Fork dimensions	s/ e/l	mm	51 x 160 x 810				51 x 160 x 970			
	4.25	Width across forks	b5	mm	680							
	4.32	Ground clearance centre of wheelbase	m2	mm	38							
	4.34.1	Aisle width (pallet 1000×1200 sideways)	Ast	mm	1610							
	4.34.2	Aisle width (pallet 800x1200 length)	Ast	mm	1810							
	4.35	Turning radius	Wa	mm	1000				1160			
Performance data	5.3	Lowering speed laden/unladen		m/s	0.1 / 0.05							

- This data sheet according to VDI guideline 2198 only states the technical values of the standard truck. Different tyres, other masts, additional equipment etc. may result in different values.

Characteristic	1.1	Manufacturer (abbreviated description)			Other (OEM)							
	1.2	Manufacturer's type designation			AM I20							
	1.3	Drive type			Manual							
	1.4	Operation			Manual							
	1.5	Load capacity/load	Q	kg	2000							
	1.6	Load centre distance	c	mm	570				610			
	1.9	Wheelbase	y	mm	1165				1245			
Weights	2.1	Netto weight		kg	75		78					81
	2.1.1	Service weight (incl. battery)		kg	75		78					81
Wheels/chassis	3.1	Tyres			N-GN	V-GV	N-BN	V-BV	N-GN	V-GV	V-BV	N-BN
	3.2	Tyre size, front			Ø 200x50							
	3.3	Tyre size, rear			Ø 80x90		Ø 80x65	Ø 80x70	Ø 80x90			Ø 80x65
	3.5	Wheels, number front/back (x=driven)			2/2							
	3.6	Tread width, front	b10	mm	120							
	3.7	Tread width, rear	b11	mm	520							
Basic dimensions	4.4	Lift (h3)	h3	mm	120							
	4.9	Height of tiller handle in drive position min./max.	h14	mm	1170							
	4.14	Stand height, elevated	h12	mm	200							
	4.15	Height, lowered	h13	mm	85							
	4.19	Total length	l1	mm	1475				1555			
	4.21.1	total width	b1	mm	680							
	4.22	Fork dimensions	s/ e/l	mm	51 x 160 x 1140				51 x 160 x 1220			
	4.25	Width across forks	b5	mm	680							
	4.32	Ground clearance centre of wheelbase	m2	mm	38							
	4.34.1	Aisle width (pallet 1000×1200 sideways)	Ast	mm	1610							
	4.34.2	Aisle width (pallet 800x1200 length)	Ast	mm	1810				1830			
	4.35	Turning radius	Wa	mm	1330				1410			
Performance data	5.3	Lowering speed laden/unladen		m/s	0.1 / 0.05							

- This data sheet according to VDI guideline 2198 only states the technical values of the standard truck. Different tyres, other masts, additional equipment etc. may result in different values.

The German production facilities in Norderstedt, Moosburg and Landsberg are certified as well as our Genuine Parts Center in Kaltenkirchen.

ISO 9001
ISO 14001

Jungheinrich fork lift trucks meet European safety requirements.

CE

JUNGHEINRICH