Electric pedestrian stacker

ERC 212b-220b

Lift height: 2400-6000 mm / Load capacity: 1200-2000 kg

LI-ION technology

JUNGHEINRICH

ERC 212b-220b

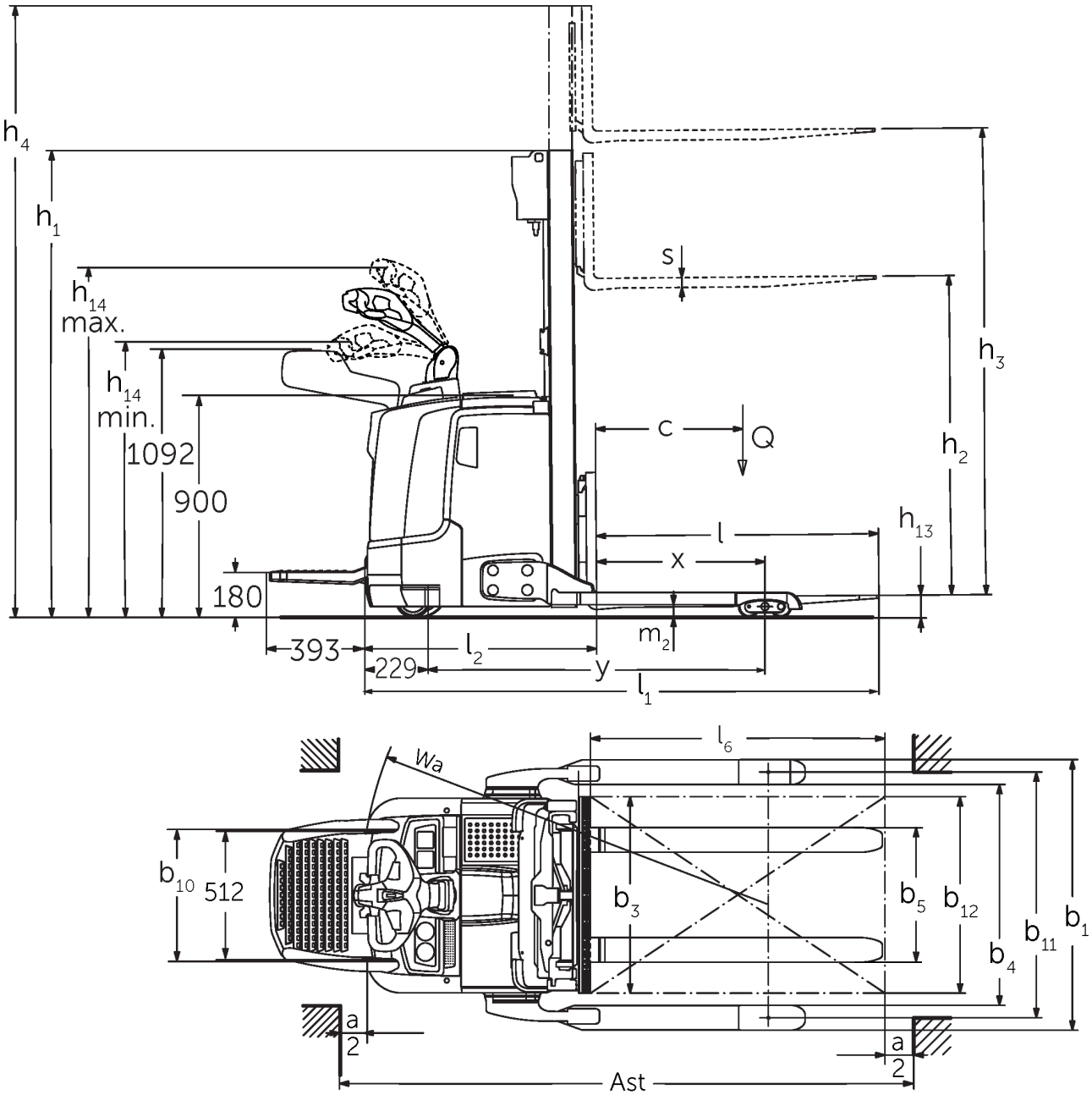

Dimensional drawing ERC 2b

ERC 212b-220b

ERC 212b	Lift (h3)	Retracted mast height (h1)	Free lift (h2)	Extended mast height (h4)
Duplex mast ZT	2500 mm	1750 mm	100 mm	3070 mm
	2700 mm	1850 mm	100 mm	3270 mm
	2900 mm	1950 mm	100 mm	3470 mm
	3200 mm	2100 mm	100 mm	3770 mm
	3600 mm	2300 mm	100 mm	4170 mm
Duplex mast ZZ	2500 mm	1700 mm	1225 mm	3070 mm
	2900 mm	1900 mm	1425 mm	3470 mm
	3200 mm	2050 mm	1575 mm	3770 mm
	3600 mm	2250 mm	1775 mm	4170 mm
Triplex mast DZ	4090 mm	1845 mm	1250 mm	4690 mm
	4300 mm	1915 mm	1430 mm	4870 mm
	4700 mm	2050 mm	1565 mm	5275 mm

ERC 214b	Lift (h3)	Retracted mast height (h1)	Free lift (h2)	Extended mast height (h4)
Duplex mast ZT	2500 mm	1750 mm	100 mm	3070 mm
	2700 mm	1850 mm	100 mm	3270 mm
	2900 mm	1950 mm	100 mm	3470 mm
	3200 mm	2100 mm	100 mm	3770 mm
	3600 mm	2300 mm	100 mm	4170 mm
	4100 mm	2550 mm	100 mm	4670 mm
	4300 mm	2650 mm	100 mm	4870 mm
	4500 mm	2750 mm	100 mm	5070 mm
Duplex mast ZZ	2500 mm	1700 mm	1130 mm	3070 mm
	2900 mm	1900 mm	1330 mm	3470 mm
	3200 mm	2050 mm	1480 mm	3770 mm
	3600 mm	2250 mm	1680 mm	4170 mm
	4100 mm	2500 mm	1930 mm	4670 mm
	4300 mm	2600 mm	2030 mm	4870 mm
Triplex mast DZ	4090 mm	1830 mm	1260 mm	4660 mm

	4300 mm	1900 mm	1330 mm	4870 mm
	4690 mm	2030 mm	1460 mm	5260 mm
	5350 mm	2250 mm	1680 mm	5920 mm
ERC 214b, ERC 216b	**Lift (h3)**	**Retracted mast height (h1)**	**Free lift (h2)**	**Extended mast height (h4)**
Triplex mast DZ	6000 mm	2500 mm	1930 mm	6570 mm
ERC 216b	**Lift (h3)**	**Retracted mast height (h1)**	**Free lift (h2)**	**Extended mast height (h4)**
Duplex mast ZT	2400 mm	1750 mm	100 mm	2970 mm
	2600 mm	1850 mm	100 mm	3170 mm
	2800 mm	1950 mm	100 mm	3370 mm
	3100 mm	2100 mm	100 mm	3670 mm
	3500 mm	2300 mm	100 mm	4070 mm
	3800 mm	2450 mm	100 mm	4370 mm
	4000 mm	2550 mm	100 mm	4570 mm
	4200 mm	2650 mm	100 mm	4770 mm
	4400 mm	2750 mm	100 mm	4970 mm
Duplex mast ZZ	2400 mm	1700 mm	1130 mm	2970 mm
	2800 mm	1900 mm	1330 mm	3370 mm
	3100 mm	2050 mm	1480 mm	3670 mm
	3500 mm	2250 mm	1680 mm	4070 mm
	4000 mm	2500 mm	1930 mm	4570 mm
	4200 mm	2600 mm	2030 mm	4770 mm
Triplex mast DZ	3990 mm	1830 mm	1260 mm	4560 mm
	4200 mm	1900 mm	1330 mm	4770 mm
	4590 mm	2030 mm	1460 mm	5160 mm
	5250 mm	2250 mm	1680 mm	5820 mm
ERC 220b	**Lift (h3)**	**Retracted mast height (h1)**	**Free lift (h2)**	**Extended mast height (h4)**
Duplex mast ZT	2540 mm	1950 mm	100 mm	3195 mm
	2840 mm	2100 mm	100 mm	3495 mm
	3540 mm	2450 mm	100 mm	4195 mm

Duplex mast ZZ	2540 mm	1900 mm	1245 mm	3195 mm
	2840 mm	2050 mm	1395 mm	3495 mm
	3540 mm	2400 mm	1745 mm	4195 mm
Triplex mast DZ	3750 mm	1900 mm	1218 mm	4432 mm
	4200 mm	2050 mm	1368 mm	4882 mm
	4800 mm	2250 mm	1568 mm	5482 mm

VDI table

Characteristic	1.1	Manufacturer (abbreviated description)			Jungheinrich			
	1.3	Drive			Electric			
	1.4	Operation			Pedestrian			
	1.5	Load capacity/load	Q	kg	1200	1400	1600	2000
	1.6	Load centre distance	c	mm	600			
	1.8	Load distance, centre of drive axle to fork	x	mm	688	668		
	1.9	Wheelbase	y	mm	1339	1411		
Weights	2.1.1	Service weight (incl. battery)		kg	1170	1215	1250	1316
	2.2	Axle load laden front/rear		kg	900 / 1470	920 / 1730	920 / 1930	983 / 2332
	2.3	Axle load unladen front/rear		kg	830 / 340	850 / 400		906 / 410
Wheels/suspension system	3.1	Tyres			Polyurethane (PU)			
	3.2	Tyre size, front			Ø 230 x 77			
	3.3	Tyre size, rear			Ø 85 x 75			
	3.4	Additional wheels			Ø 140 x 54			
	3.5	Wheels, number front/back (x=driven)			1x +1/4			
	3.6	Tread width, front	b10	mm	515			
	3.7	Tread width, rear	b11	mm	1000			
Basic dimensions	4.2	Retracted mast height (h1)	h1	mm	1950			2100
	4.3	Free lift (h2)	h2	mm	100			
	4.4	Lift (h3)	h3	mm	2900		2800	2840
	4.5	Extended mast height (h4)	h4	mm	3470		3370	3495
	4.9	Height of tiller handle in drive position min./max.	h14	mm	1170 / 1390			
	4.19	total length	l1	mm	2030	2123		
	4.20	Length including fork shank	l2	mm	880	973		
	4.21.1	total width	b1	mm	1100			
	4.22	Fork dimensions	s/ e/l	mm	40 x 100 x 1150			40 x 120 x 1150
	4.23	Fork carriage connection class			2A			2B
	4.24	Fork carriage width	b3	mm	800			
	4.32	Ground clearance centre of wheelbase	m2	mm	50			40
	4.34.1	Aisle width (pallet 1000×1200 sideways)	Ast	mm	2252	2322		
	4.34.2	Aisle width (pallet 800x1200 length)	Ast	mm	2302	2372		
	4.35	Turning radius	Wa	mm	1570	1640		
Performance data	5.1	Travel speed laden/unladen (Efficiency | drivePLUS)		km/h	6 / 6 | 9 / 11			6 / 6 | 8 / 10
	5.2	Lift speed laden/unladen		m/s	0.2 / 0.4	0.16 / 0.3	0.15 / 0.3	0.11 / 0.34
	5.3	Lowering speed laden/unladen		m/s	0.45 / 0.35			0.5 / 0.35
	5.8	Max. gradeability laden/unladen (Efficiency | drivePLUS)		%	10 / 16 | 10 / 20	9 / 16 | 10 / 20	8 / 16 | 10 / 20	5 / 16 | 6 / 20
	5.10	Service brake			generative			

E-motor/Electronics	6.1	Drive motor, performance S2 60 min (Efficiency | drivePLUS)	kW	2.8 | 3.2			
	6.2	Lift motor, performance with S3	kW	3			
	6.3	Battery according to DIN 43531/35/36		DIN 43535 B			
	6.4	Battery voltage/nominal capacity	V / Ah	24 / 300	24 / 375		
	6.5	Battery weight	kg	238	273		
	6.6	Energy consumption according to VDI cycle	kWh/h	-			1.45
	6.6.1	Energy consumption according to EN cycle (Efficiency | PLUS)	kWh/h	0.63 | 0.64	0.81 | 0.74	0.86 | 0.83	1.07 | -
	6.6.2	CO2 equivalent according to EN ISO 23308 (Efficiency | PLUS)	kg/h0	0.3 | 0.3	0.4 | 0.4	0.5 | 0.4	0.6 | -
	6.7	Throughput (Efficiency | PLUS)	t/h	56 | 57	64 | 65	71 | 73	85 | -
	6.8.1	Energy consumption with max. throughput (Efficiency | PLUS)	kWh/h	1.63 | 1.65	1.65 | 1.64	1.67 | 1.65	2.13 | -
Other	8.1	Type of drive control		AC			
	10.7	Sound pressure level according to EN12053	dB (A)	64			

- This data sheet according to VDI guideline 2198 only states the technical values of the standard truck. Different tyres, other masts, additional equipment etc. may result in different values.

The values in the table apply for the M-VBE (ERC 212b) / L-VBE (ERC 214b / 216b / 220b) battery compartment; mast ZT2800 / 2840 / 2900; fork length 1,150 mm, tread width 1,000 mm.
- VDI no. 1.8 with ERC 212b / 214b / 216b: with DZ mast: x - 3 mm.
- VDI no. 1.8 with ERC 220b: with DZ mast: x - 32 mm.
- VDI no. 1.9 with ERC 214b / 216b / 220b: with M Li-ion battery compartment: y - 72 mm.
- VDI no. 3.7: depending on the set tread width: 1,000 mm / 1,170 mm / 1,370 mm.
- VDI no. 4.19 with ERC 212b / 214b / 216b: with DZ mast: l1 + 3 mm.
- VDI no. 4.19 with ERC 220b: with DZ mast: l1 + 32 mm.
- VDI no. 4.19 with ERC 214b / 216b / 220b: with M Li-ion battery compartment: l1 - 72 mm.
- VDI no. 4.20 with ERC 212b / 214b / 216b: with DZ mast: l2 + 3 mm.
- VDI no. 4.20 with ERC 220b: with DZ mast: l2 + 32 mm.
- VDI no. 4.20 with ERC 214b / 216b / 220b: with M Li-ion battery compartment: l2 - 72 mm.
- VDI no. 4.21: depending on the set tread width: 1,100 mm / 1,270 mm / 1,470 mm.
- VDI no. 4.24: optional: 975 mm available.
- VDI no. 4.34.1: diagonal as per VDI: aisle width + 203 mm / + 203 mm / + 259 mm (depending on tread width).
- VDI no. 4.34.1 with ERC 212b / 214b / 216b: with DZ mast: aisle width + 3 mm.
- VDI no. 4.34.1 with ERC 220b: with DZ mast: aisle width + 32 mm.
- VDI no. 4.34.1 with ERC 214b / 216b / 220b: with M Li-ion battery compartment: aisle width - 72 mm.
- VDI no. 4.34.2: diagonal as per VDI: aisle width + 133 mm / + 133 mm / + 209 mm (depending on tread width).
- VDI no. 4.34.2 with ERC 212b / 214b / 216b: with DZ mast: aisle width + 3 mm.
- VDI no. 4.34.2 with ERC 220b: with DZ mast: aisle width + 32 mm.
- VDI no. 4.34.2 with ERC 214b / 216b / 220b: with M Li-ion battery compartment: aisle width - 72 mm.
- VDI no. 4.35 with ERC 214b / 216b / 220b: with M Li-ion battery compartment: Wa - 72 mm.
- VDI no. 5.1: with Efficiency performance package without operator restraint system: 6.0 / 6.0 km/h; with operator restraint system: 9.0 / 9.0 km/h.
- VDI no. 5.3: with ZZ / DZ mast: the lowering speed in free lift is below the specified values.

The German production facilities in Norderstedt, Moosburg and Landsberg are certified as well as our Genuine Parts Center in Kaltenkirchen.

ISO 9001
ISO 14001

Jungheinrich fork lift trucks meet European safety requirements.

CE

JUNGHEINRICH