Electric three-wheel counterbalance forklift truck

EFG BA 113/115

Lift height: 3000-6500 mm / Load capacity: 1300-1500 kg

LI-ION technology

JUNGHEINRICH

EFG BA 113/115

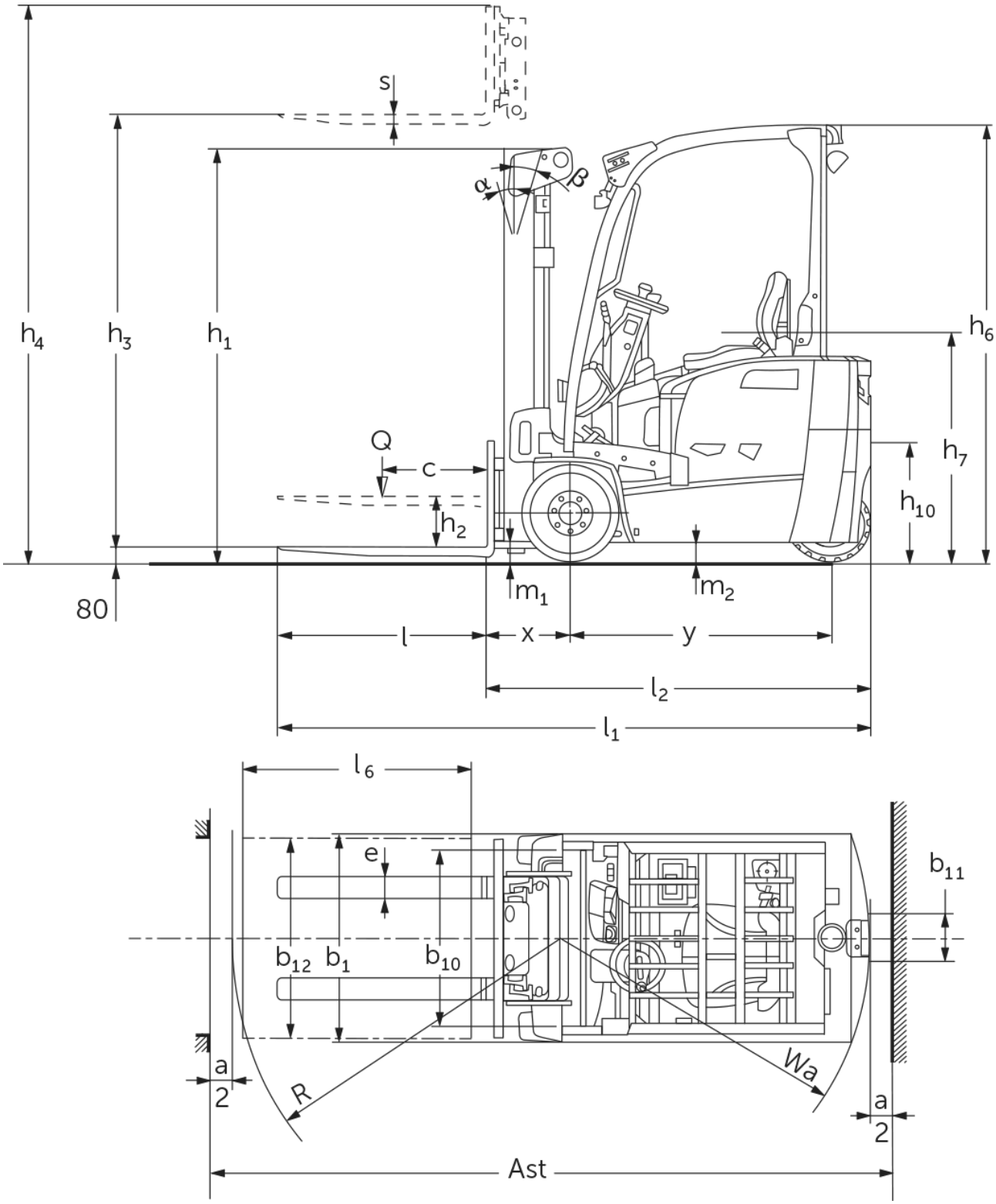

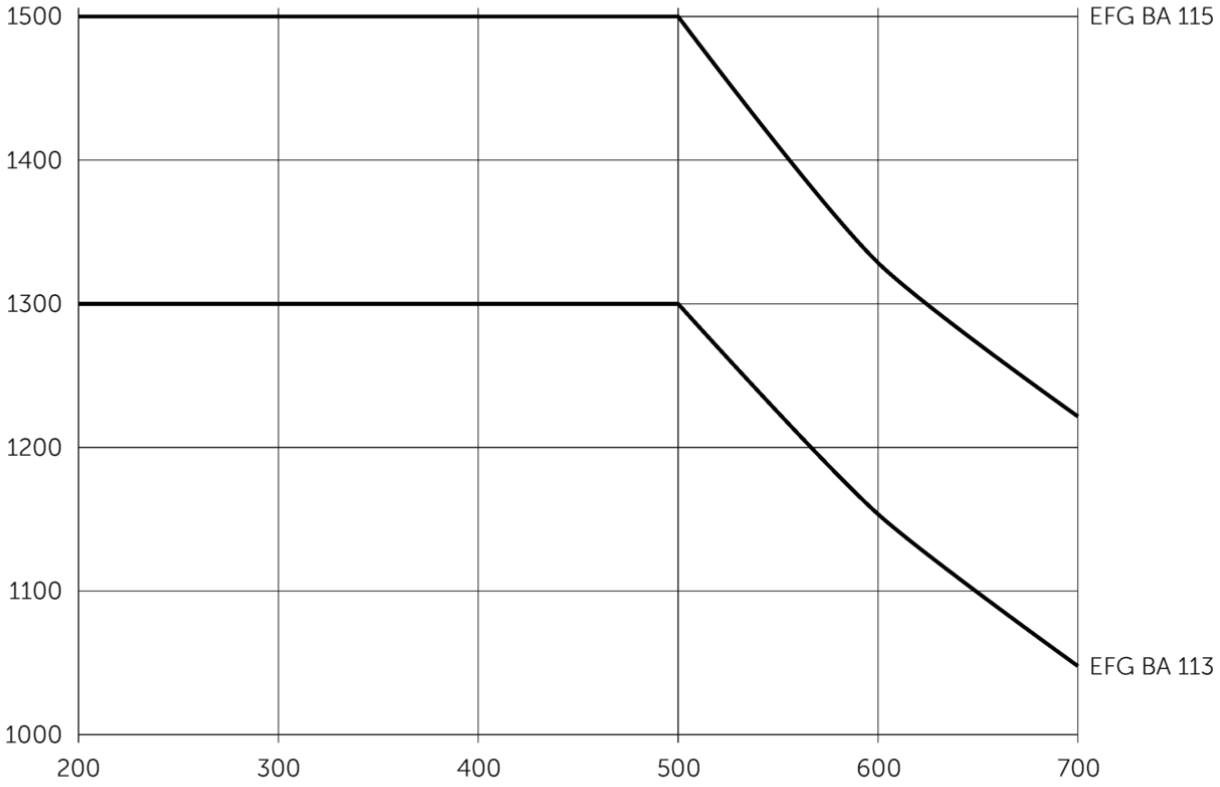
1500
1400
1300
1200
1100
1000
200
300
400
500
600
700
EFG BA 115
EFG BA 113

EFG BA 113/115

EFG BA 113, EFG BA 115	Lift (h3)	Retracted mast height (h1)	Free lift (h2)	Extended mast height (h4)	Forward/ backward tilt of fork carriage
Duplex mast ZT	3000 mm	2000 mm	150 mm	3555 mm	7 / 5 °
	3300 mm	2150 mm	150 mm	3855 mm	7 / 5 °
	3600 mm	2300 mm	150 mm	4155 mm	7 / 5 °
	5000 mm	3050 mm	150 mm	5555 mm	7 / 5 °
Duplex mast ZZ	3300 mm	2105 mm	1470 mm	3855 mm	7 / 5 °
	3600 mm	2255 mm	1620 mm	4155 mm	7 / 5 °
Triplex mast DZ	4500 mm	2005 mm	1360 mm	5055 mm	7 / 5 °
	4800 mm	2105 mm	1460 mm	5355 mm	7 / 5 °
	5000 mm	2180 mm	1530 mm	5555 mm	7 / 5 °
	5500 mm	2355 mm	1710 mm	6055 mm	7 / 5 °
	6000 mm	2555 mm	1910 mm	6555 mm	7 / 5 °
	6500 mm	2805 mm	2160 mm	7055 mm	7 / 5 °

VDI table

Characteristic	1.1	Manufacturer (abbreviated description)			Jungheinrich	
	1.2	Manufacturer's type designation			EFG BA 113	EFG BA 115
	1.3	Drive type			electric	
	1.4	Operation			Seat	
	1.5	Load capacity/load	Q	kg	1300	1500
	1.6	Load centre distance	c	mm	500	
	1.8	Load distance, centre of drive axle to fork	x	mm	387	392
	1.9	Wheelbase	y	mm	1156	1249
Weights	2.1.1	Service weight (incl. battery)		kg	3045	3221
	2.2	Axle load laden front/rear		kg	3753 / 592	3974 / 747
	2.3	Axle load unladen front/rear		kg	1422 / 1623	1482 / 1739
Wheels/chassis	3.1	Tyres			Super-elastic (SE)	
	3.2	Tyre size, front			18x6-12/1/8	
	3.3	Tyre size, rear			140/55-9	
	3.5	Wheels, number front/back (x=driven)			2x / 2	
	3.6	Tread width, front	b10	mm	838	
	3.7	Tread width, rear	b11	mm	211	
Basic dimensions	4.1	Forward/backward tilt of mast	a/ß	°	7 / 5	
	4.2	Retracted mast height (h1)	h1	mm	2000	
	4.2.1	Total height	h15	mm	2080	
	4.3	Free lift (h2)	h2	mm	150	
	4.4	Lift (h3)	h3	mm	3000	
	4.5	Extended mast height (h4)	h4	mm	3555	
	4.7	Height of overhead guard (cab)	h6	mm	2080	
	4.8	Seat height/stand height	h7	mm	1030	
	4.12	Coupling height	h10	mm	560	
	4.19	Total length	l1	mm	2732	2830
	4.20	Length including fork shank	l2	mm	1732	1830
	4.21.1	total width	b1	mm	990	
	4.22	Fork dimensions	s/e/l	mm	35 x 100 x 1000	40 x 100 x 1000
	4.23	Fork carriage connection class			2A	
	4.24	Fork carriage width	b3	mm	950	
	4.31	Ground clearance laden under mast	m1	mm	97	
	4.32	Ground clearance centre of wheelbase	m2	mm	88	
	4.34.1	Aisle width (pallet 1000×1200 sideways)	Ast	mm	3056	3154
	4.34.2	Aisle width (pallet 800x1200 length)	Ast	mm	3182	3279
	4.35	Turning radius	Wa	mm	1345	1438
	4.36	Smallest pivot point distance	b13	mm	0	

Performance data	5.1	Travel speed laden/unladen	km/h	12.5 / 12.5	
	5.2	Lift speed laden/unladen	m/s	0.25 / 0.53	0.24 / 0.53
	5.3	Lowering speed laden/unladen	m/s	0.55 / 0.54	
	5.5	Drawbar pull laden/unladen	N	716 / 757	886 / 767
	5.6	Max. drawbar pull laden/unladen	N	8752 / 8480	8675 / 9149
	5.7	Gradeability laden/unladen	%	8 / 12	8 / 11
	5.8	Max. gradeability laden/unladen	%	15 / 20	14 / 19
	5.9	Acceleration time laden/unladen	s	7.1 / 6.1	7.1 / 6.5
	5.10	Service brake		mechanical/hydraulic	
Electric motor/electronics	6.1	Drive motor, performance S2 60 min	kW	3.7	
	6.1.1	2. Drive motor, performance S2 60 min	kW	3.7	
	6.2	Lift motor, performance with S3	kW	10	
	6.3	Battery according to DIN 43531/35/36		DIN 43531 A	
	6.4	Battery voltage/nominal capacity	V / Ah	48 / 375	48 / 500
	6.5	Battery weight	kg	560	708
	6.6.1	Energy consumption according to EN cycle	kWh/h	3.33	3.64
	6.6.2	CO2 equivalent according to EN ISO 23308	kg/h0	1.8	1.9
	6.7	Throughput	t/h	86	97
	6.8.1	Energy consumption with max. throughput	kWh/h	3.38	3.92
Other	8.1	Type of drive control		Impulse/AC	
	10.1	Operating pressure for attachment	bar	230	
	10.2	Oil flow for attachments	l/min	17	
	10.7	Sound pressure level according to EN12053	dB (A)	72	
	10.8	Trailer coupling, model/type DIN		Bolts	

- This data sheet according to VDI guideline 2198 only states the technical values of the standard truck. Different tyres, other masts, additional equipment etc. may result in different values.

The German production facilities in Norderstedt, Moosburg and Landsberg are certified as well as our Genuine Parts Center in Kaltenkirchen.

ISO 9001
ISO 14001

Jungheinrich fork lift trucks meet European safety requirements.

CE

JUNGHEINRICH