Electric four wheel counterbalance forklift truck

EFG 425-435

Lift height: 2900-7500 mm / Load capacity: 2500-3500 kg

LI ION technology

JUNGHEINRICH

EFG 425-435

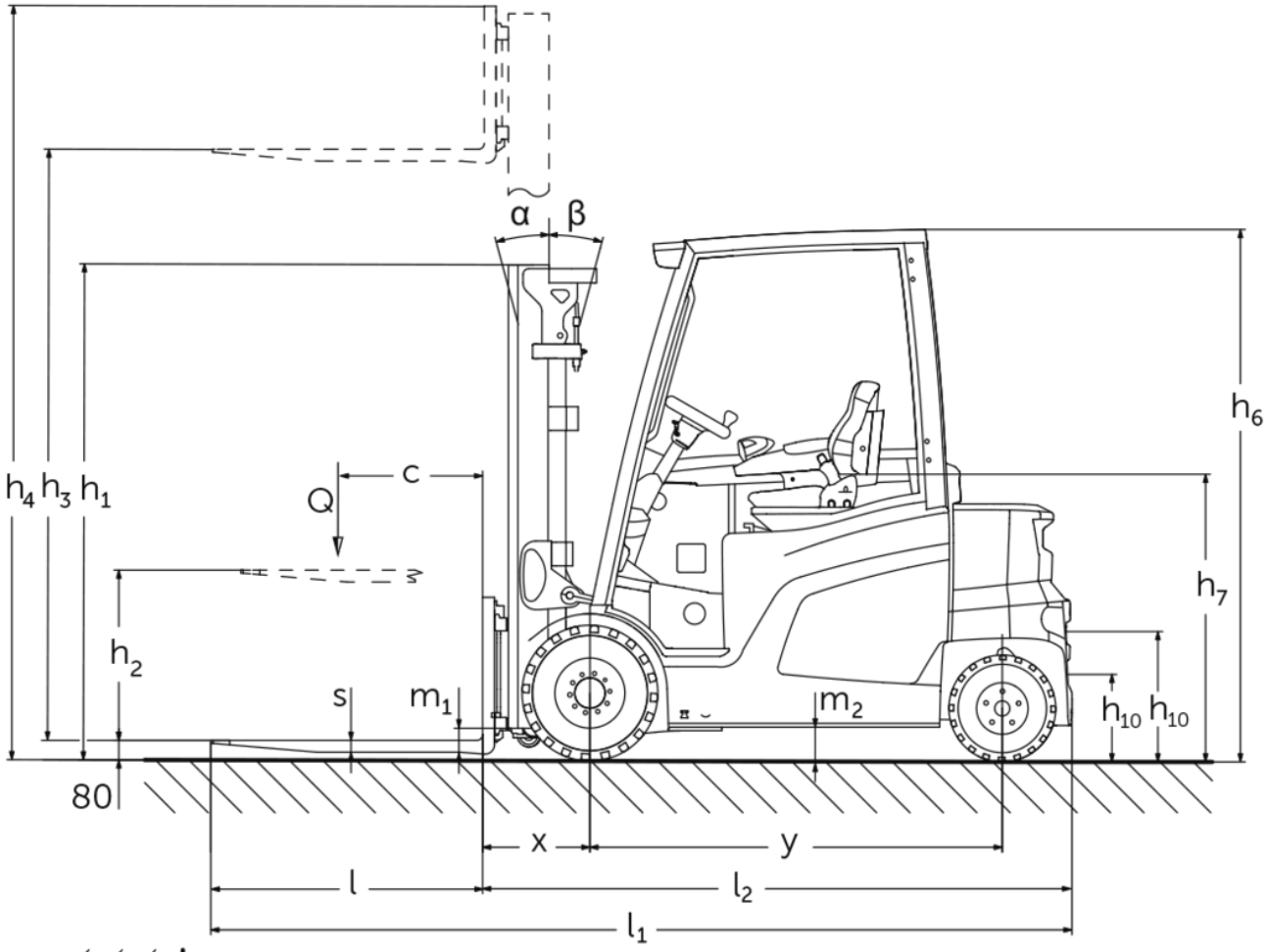
α
β
h6
h4 h3 h1
c
Q
h7
h2
s
m1
m2
h10 h10
80
x
y
l
l2
l1

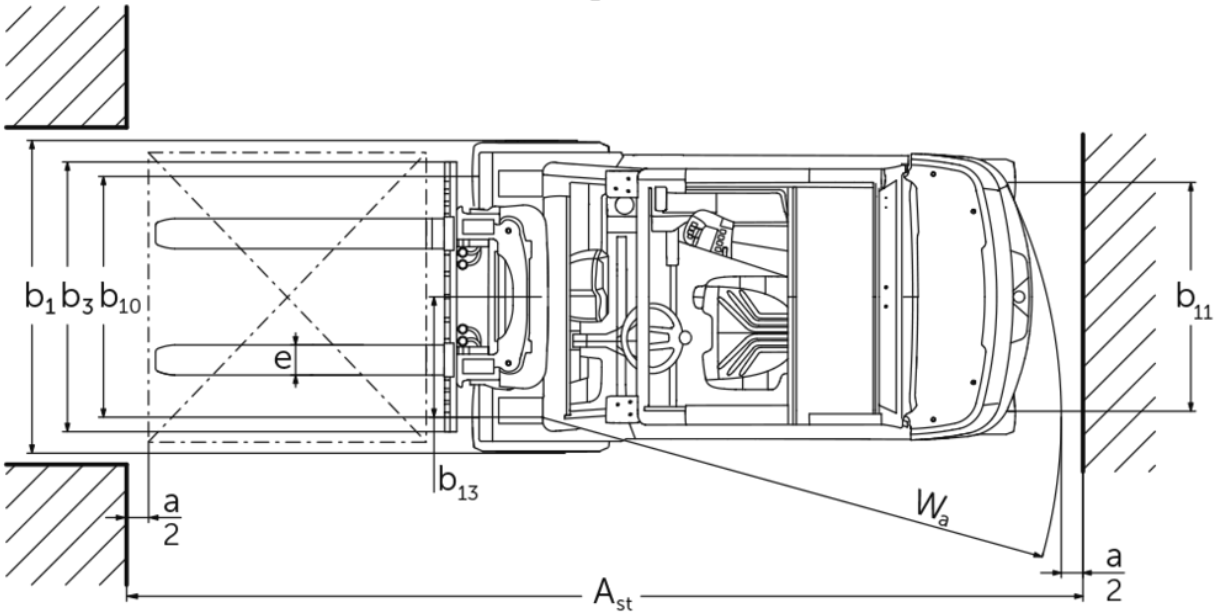
b1 b3 b10
e
b11
b13
a/2
Wa
a/2
Ast

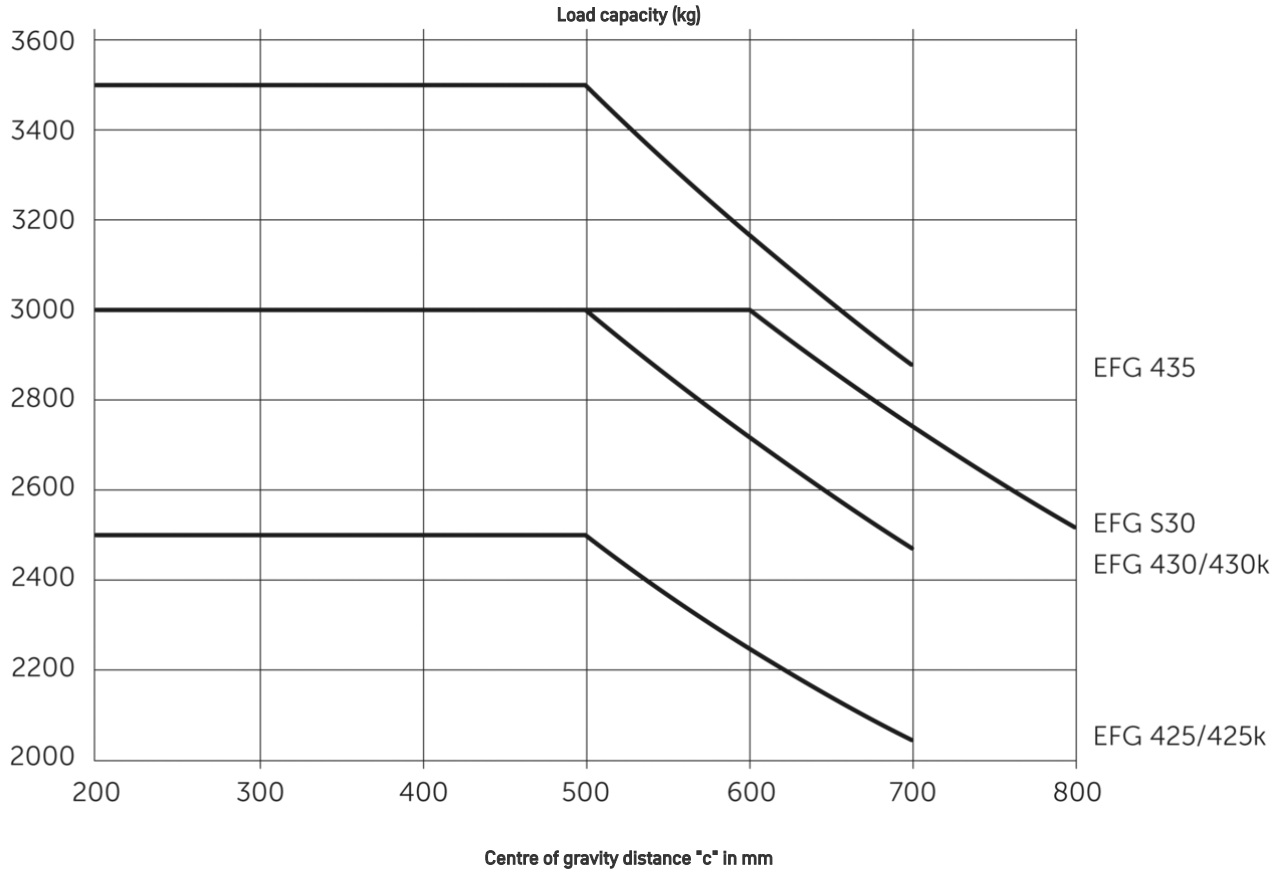
Load capacity (kg)
3600
3400
3200
3000
2800
2600
2400
2200
2000
200
300
400
500
600
700
800
EFG 435
EFG S30
EFG 430/430k
EFG 425/425k
Centre of gravity distance "c" in mm

EFG 425-435

EFG 425k, EFG 425	Lift (h3)	Retracted mast height (h1)	Free lift (h2)	Extended mast height (h4)	Forward/ backward tilt of mast
Duplex mast ZT	2900 mm	2125 mm	150 mm	3500 mm	6 / 8 °
	3100 mm	2225 mm	150 mm	3700 mm	6 / 8 °
	3300 mm	2325 mm	150 mm	3900 mm	6 / 8 °
	3500 mm	2425 mm	150 mm	4100 mm	6 / 8 °
	3700 mm	2525 mm	150 mm	4300 mm	6 / 8 °
	4000 mm	2675 mm	150 mm	4600 mm	6 / 8 °
	4300 mm	2875 mm	150 mm	4950 mm	6 / 8 °
	4500 mm	2975 mm	150 mm	5150 mm	6 / 8 °
	5000 mm	3225 mm	150 mm	5650 mm	6 / 8 °
	5500 mm	3525 mm	150 mm	6200 mm	6 / 8 °
Duplex mast ZZ	3100 mm	2190 mm	1600 mm	3690 mm	6 / 8 °
	3300 mm	2290 mm	1700 mm	3890 mm	6 / 8 °
	3500 mm	2390 mm	1800 mm	4090 mm	6 / 8 °
	3700 mm	2490 mm	1900 mm	4290 mm	6 / 8 °
	4000 mm	2640 mm	2050 mm	4590 mm	6 / 8 °
Triplex mast DZ	4400 mm	2090 mm	1500 mm	4990 mm	6 / 8 °
	4700 mm	2190 mm	1600 mm	5290 mm	6 / 8 °
	5000 mm	2290 mm	1700 mm	5590 mm	6 / 8 °
	5500 mm	2490 mm	1900 mm	6090 mm	6 / 8 °
	6000 mm	2690 mm	2100 mm	6590 mm	6 / 8 °
	6500 mm	2890 mm	2300 mm	7090 mm	6 / 8 °
	7000 mm	3090 mm	2500 mm	7590 mm	6 / 8 °
	7500 mm	3290 mm	2700 mm	8090 mm	6 / 8 °
EFG 430k, EFG 430, EFG S30	**Lift (h3)**	**Retracted mast height (h1)**	**Free lift (h2)**	**Extended mast height (h4)**	**Forward/ backward tilt of mast**
Duplex mast ZT	2900 mm	2122 mm	150 mm	3657 mm	6 / 8 °

	3100 mm	2222 mm	150 mm	3857 mm	6 / 8 °
	3300 mm	2322 mm	150 mm	4057 mm	6 / 8 °
	3500 mm	2422 mm	150 mm	4257 mm	6 / 8 °
	3700 mm	2522 mm	150 mm	4457 mm	6 / 8 °
	4000 mm	2672 mm	150 mm	4757 mm	6 / 8 °
	4300 mm	2872 mm	150 mm	5057 mm	6 / 8 °
	4500 mm	2972 mm	150 mm	5257 mm	6 / 8 °
	5000 mm	3222 mm	150 mm	5757 mm	6 / 8 °
	5500 mm	3522 mm	150 mm	6257 mm	6 / 8 °
Duplex mast ZZ	3100 mm	2187 mm	1450 mm	3837 mm	6 / 8 °
	3300 mm	2287 mm	1450 mm	3837 mm	6 / 8 °
	3500 mm	2387 mm	1650 mm	4237 mm	6 / 8 °
	3700 mm	2487 mm	1750 mm	4437 mm	6 / 8 °
	4000 mm	2637 mm	1900 mm	4737 mm	6 / 8 °
Triplex mast DZ	4400 mm	2087 mm	1350 mm	5137 mm	6 / 8 °
	4700 mm	2187 mm	1450 mm	5437 mm	6 / 8 °
	5000 mm	2287 mm	1550 mm	5737 mm	6 / 8 °
	5500 mm	2487 mm	1750 mm	6237 mm	6 / 8 °
	6000 mm	2687 mm	1950 mm	6737 mm	6 / 8 °
	6500 mm	2887 mm	2150 mm	7237 mm	6 / 8 °
	7000 mm	3087 mm	2350 mm	7737 mm	6 / 8 °
	7500 mm	3287 mm	2550 mm	8237 mm	6 / 8 °
EFG 435	**Lift (h3)**	**Retracted mast height (h1)**	**Free lift (h2)**	**Extended mast height (h4)**	**Forward/ backward tilt of mast**
Duplex mast ZT	2900 mm	2152 mm	150 mm	3686 mm	6 / 8 °
	3100 mm	2252 mm	150 mm	3886 mm	6 / 8 °
	3300 mm	2352 mm	150 mm	4086 mm	6 / 8 °
	3500 mm	2452 mm	150 mm	4286 mm	6 / 8 °
	3700 mm	2552 mm	150 mm	4486 mm	6 / 8 °
	4000 mm	2702 mm	150 mm	4786 mm	6 / 8 °
	4300 mm	2902 mm	150 mm	5086 mm	6 / 8 °
	4500 mm	3002 mm	150 mm	5286 mm	6 / 8 °
	5000 mm	3303 mm	150 mm	5787 mm	6 / 8 °
	5500 mm	3603 mm	150 mm	6287 mm	6 / 8 °

Duplex mast ZZ	3100 mm	2217 mm	1451 mm	3866 mm	6 / 8 °
	3300 mm	2317 mm	1551 mm	4066 mm	6 / 8 °
	3500 mm	2417 mm	1651 mm	4266 mm	6 / 8 °
	3700 mm	2517 mm	1751 mm	4466 mm	6 / 8 °
	4000 mm	2667 mm	1901 mm	4766 mm	6 / 8 °
Triplex mast DZ	4400 mm	2117 mm	1351 mm	5166 mm	6 / 8 °
	4700 mm	2217 mm	1451 mm	5466 mm	6 / 8 °
	5000 mm	2317 mm	1551 mm	5766 mm	6 / 8 °
	5500 mm	2517 mm	1751 mm	6266 mm	6 / 8 °
	6000 mm	2717 mm	1951 mm	6766 mm	6 / 8 °
	6500 mm	2917 mm	2151 mm	7266 mm	6 / 8 °
	7000 mm	3117 mm	2351 mm	7766 mm	6 / 8 °
	7500 mm	3317 mm	2551 mm	8266 mm	6 / 8 °

VDI table

Characteristic	1.1	Manufacturer (abbreviated description)			Jungheinrich					
	1.2	Manufacturer's type designation			EFG 425k	EFG 425	EFG 430k	EFG 430	EFG S30	EFG 435
	1.3	Drive type			electric					
	1.4	Operation			Seat					
	1.5	Load capacity/load	Q	kg	2500		3000			3500
	1.6	Load centre distance	c	mm	500				600	500
	1.8	Load distance, centre of drive axle to fork	x	mm	442		447			
	1.9	Wheelbase	y	mm	1595	1740	1595	1745		
Weights	2.1.1	Service weight (incl. battery)		kg	4691	4642	5298	5143	5435	5664
	2.2	Axle load laden front/rear		kg	6414 / 776	6466 / 676	7404 / 895	7395 / 748	7605 / 829	8239 / 926
	2.3	Axle load unladen front/rear		kg	2419 / 2272	2595 / 2047	2594 / 2704	2741 / 2402	2771 / 2664	2805 / 2859
Wheels/chassis	3.1	Tyres			Super-elastic (SE)					
	3.2	Tyre size, front			225/75-10		250/60-12		315/45-12	
	3.3	Tyre size, rear			180/70-8		200/50-10	180/70-8	200/50-10	
	3.5	Wheels, number front/back (x=driven)			2x / 2					
	3.6	Tread width, front	b10	mm	990		950		1000	
	3.7	Tread width, rear	b11	mm	940					950
Basic dimensions	4.1	Forward/backward tilt of mast	a/ß	°	6 / 8					
	4.2	Retracted mast height (h1)	h1	mm	2325		2322			2352
	4.3	Free lift (h2)	h2	mm	150					
	4.4	Lift (h3)	h3	mm	3300					
	4.5	Extended mast height (h4)	h4	mm	3900		4057			4086
	4.7	Height of overhead guard (cab)	h6	mm	2240					
	4.8	Seat height/stand height	h7	mm	1226					
	4.12	Coupling height	h10	mm	380					
	4.12.1	2. Coupling height		mm	530					
	4.19	Total length	l1	mm	3484	3632	3489	3637		
	4.20	Length including fork shank	l2	mm	2334	2482	2339	2487		
	4.21.1	total width	b1	mm	1200				1300	
	4.22	Fork dimensions	s/ e/l	mm	40 x 100 x 1150		45 x 125 x 1150			
	4.23	Fork carriage connection class			2A		3A			
	4.24	Fork carriage width	b3	mm	1120					
	4.31	Ground clearance laden under mast	m1	mm	110					
	4.32	Ground clearance centre of wheelbase	m2	mm	135					
	4.34.1	Aisle width (pallet 1000×1200 sideways)	Ast	mm	3722	3872	3727	3877		
	4.34.2	Aisle width (pallet 800x1200 length)	Ast	mm	3922	4072	3927	4077		
	4.35	Turning radius	Wa	mm	2080	2230	2080	2230		
	4.36	Smallest pivot point distance	b13	mm	580	630	580	630		

Performance data	5.1	Travel speed laden/unladen (Efficiency | drivePLUS)	km/h	17 / 17 | 20 / 20					
	5.2	Lift speed laden/unladen (Efficiency | liftPLUS)	m/s	0.58 / 0.62 | 0.64 / 0.68		0.5 / 0.52 | 0.57 / 0.63			0.44 / 0.51 | 0.5 / 0.53
	5.3	Lowering speed laden/unladen (Efficiency | liftPLUS)	m/s	0.59 / 0.62 | 0.59 / 0.62		0.58 / 0.64 | 0.58 / 0.64			0.56 / 0.59 | 0.56 / 0.59
	5.5	Drawbar pull laden/unladen (Efficiency | drivePLUS)	N	8000 / 8000 | 10000 / 10000		7000 / 7000 | 10000 / 10000			
	5.6	Max. drawbar pull laden/unladen (Efficiency | drivePLUS)	N	16000 / 16000 | 19500 / 18600		16000 / 16000 | 19500 / 19500			
	5.7	Gradeability laden/unladen (Efficiency | drivePLUS)	%	12 / 18 | 19 / 30		10 / 15 | 16 / 25			10 / 15 | 14 / 23
	5.8	Max. gradeability laden/unladen (Efficiency | drivePLUS)	%	18 / 28 | 27 / 34	18 / 28 | 27 / 38	18 / 28 | 22 / 33			17 / 28 | 20 / 33
	5.9	Acceleration time laden/unladen (Efficiency | drivePLUS)	s	6.1 / 5.7 | 5.3 / 5		6.1 / 5.4 | 5.5 / 5			6.4 / 5.5 | 5.6 / 5.1
	5.10	Service brake		Friction brake (hydraulically operated)					
Electric motor/electronics	6.1	Drive motor, performance S2 60 min (Efficiency | drivePLUS)	kW	8.9 | 11.3					
	6.1.1	2. Drive motor, performance S2 60 min (Efficiency | drivePLUS)	kW	8.9 | 11.3					
	6.2	Lift motor, performance with S3 (Efficiency | liftPLUS)	kW	19.5 | 22					
	6.3	Battery according to DIN 43531/35/36		DIN 43536 A					
	6.4	Battery voltage/nominal capacity	V / Ah	80 / 620	80 / 775	80 / 620	80 / 775		
	6.5	Battery weight	kg	1558	1863	1558	1863		
	6.6.1	Energy consumption according to EN cycle (Efficiency | PLUS)	kWh/h	6.2 | 6.2		7.2 | 7.2	7.1 | 7.1	7.4 | 7.4	8.1 | 8.3
	6.6.2	CO2 equivalent according to EN ISO 23308 (Efficiency | PLUS)	kg/h0	3.4 | 3.4		3.9 | 3.9	3.8 | 3.8	4 | 4	4.4 | 4.5
	6.7	Throughput (Efficiency | PLUS)	t/h	173 | 188		204 | 219		201 | 219	224 | 238
	6.8	Turnover efficiency according to VDI 2198 (Efficiency | PLUS)	t/kWh	22.2 | 20		22.9 | 21.3		22.8 | 21.3	24.3 | 22.2
	6.8.1	Energy consumption with max. throughput (Efficiency | PLUS)	kWh/h	7.8 | 9.4		8.9 | 10.3		8.8 | 10.3	9.2 | 10.7
Other	8.1	Type of drive control		Impulse/AC					
	10.1	Operating pressure for attachment	bar	240					
	10.2	Oil flow for attachments	l/min	45					
	10.7	Sound pressure level according to EN12053	dB (A)	69					
	10.8	Trailer coupling, model/type DIN		DIN 15170 H					

- This data sheet according to VDI guideline 2198 only states the technical values of the standard truck. Different tyres, other masts, additional equipment etc. may result in different values.

Please note:
The values specified for the standard truck were determined using Continental tyres. Different tyres on the standard truck may result in different values.

The German production facilities in Norderstedt, Moosburg and Landsberg are certified as well as our Genuine Parts Center in Kaltenkirchen.

ISO 9001
ISO 14001

Jungheinrich fork lift trucks meet European safety requirements.

CE

JUNGHEINRICH