Electric high level combination order picker / tri-lateral stacker

EKX 410-516

Lift height: 3000-18000 mm / Load capacity: 1000-1600 kg

LI-ION technology

JUNGHEINRICH

EKX 410-516

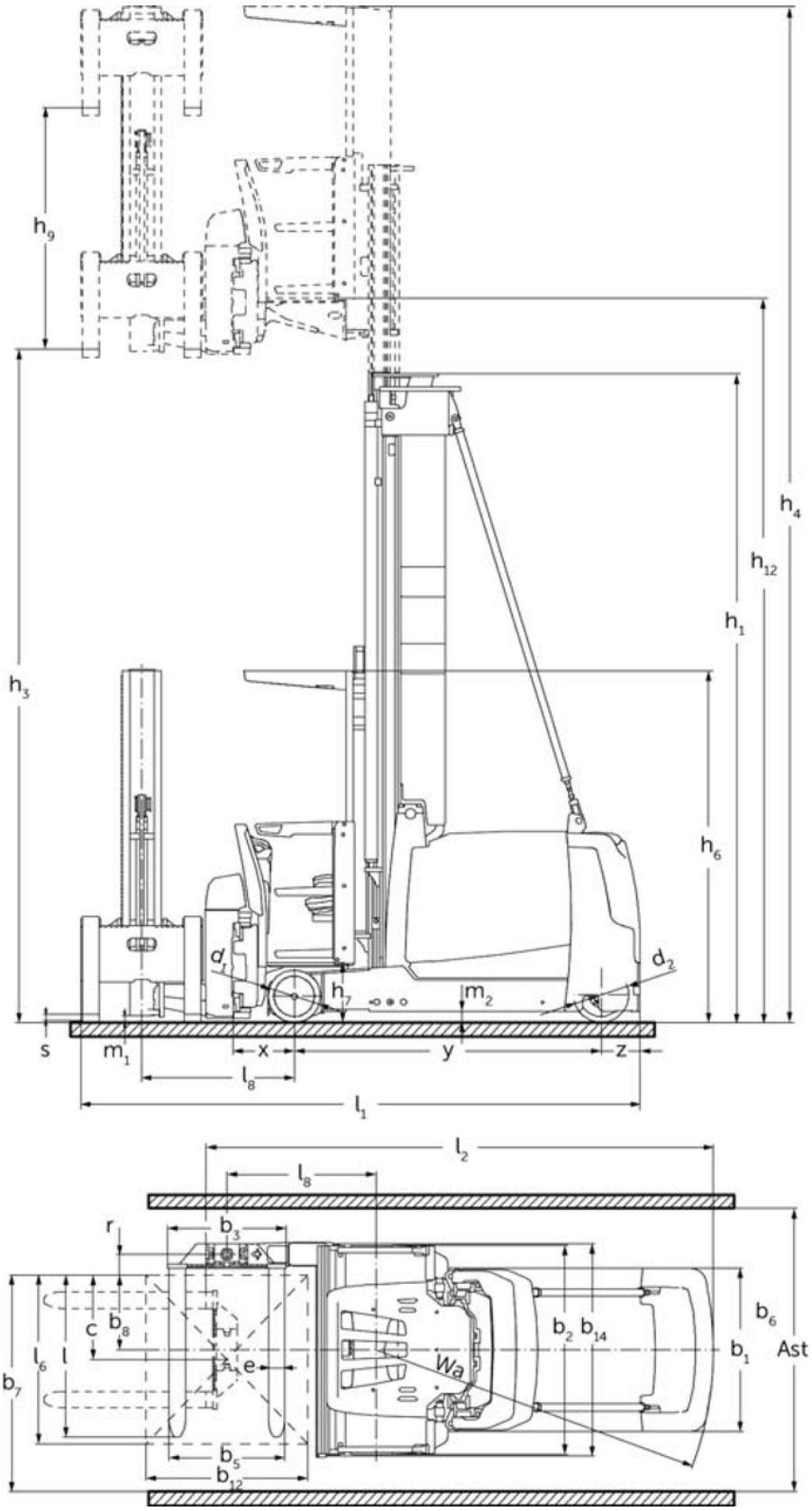
h9
h3
h4
h12
h1
h6
α1
α2
h7
m2
s
m1
x
y
z
l8
l1
l2
l8
r
b3
c
b8
l6
l
e
b7
b5
b12
b2
b14
Wa
b6
b1
Ast

EKX 410-516

EKX 410, EKX 412	Lift (h3)	Retracted mast height (h1)	Free lift (h2)	Extended mast height (h4)
Duplex mast ZT	3000 mm	2600 mm		5550 mm
	3500 mm	2850 mm		6050 mm
	4000 mm	3100 mm		6550 mm
	4500 mm	3350 mm		7050 mm
	5000 mm	3600 mm		7550 mm
	5500 mm	3850 mm		8050 mm
	6000 mm	4100 mm		8550 mm
	6500 mm	4375 mm		9050 mm
	7000 mm	4650 mm		9550 mm
	7500 mm	4925 mm		10050 mm
Triplex mast DZ	4500 mm	2625 mm	75 mm	7050 mm
	5000 mm	2800 mm	250 mm	7550 mm
	5500 mm	2975 mm	425 mm	8050 mm
	6000 mm	3150 mm	600 mm	8550 mm
	6500 mm	3325 mm	775 mm	9050 mm
	7000 mm	3500 mm	950 mm	9550 mm
	7500 mm	3675 mm	1125 mm	10050 mm
EKX 412	**Lift (h3)**	**Retracted mast height (h1)**	**Free lift (h2)**	**Extended mast height (h4)**
Duplex mast ZT	8000 mm	5200 mm		10550 mm
	8500 mm	5475 mm		11050 mm
Triplex mast DZ	8000 mm	3850 mm	1300 mm	10550 mm
	8500 mm	4025 mm	1475 mm	11050 mm
EKX 514, EKX 516k, EKX 516	**Lift (h3)**	**Retracted mast height (h1)**	**Free lift (h2)**	**Extended mast height (h4)**

Duplex mast ZT	3000 mm	2705 mm		5550 mm
	3500 mm	2955 mm		6050 mm
	4000 mm	3205 mm		6550 mm
	4500 mm	3455 mm		7050 mm
	5000 mm	3705 mm		7550 mm
	5500 mm	3955 mm		8050 mm
	6000 mm	4205 mm		8550 mm
	6500 mm	4555 mm		9050 mm
	7000 mm	4805 mm		9550 mm
	7500 mm	5055 mm		10050 mm
	8000 mm	5305 mm		10550 mm
	8500 mm	5655 mm		11050 mm
	9000 mm	5905 mm		11550 mm
	9500 mm	6155 mm		12050 mm
Triplex mast DZ	4000 mm	2550 mm		6550 mm
	4500 mm	2710 mm	160 mm	7050 mm
	5000 mm	2895 mm	345 mm	7550 mm
	5500 mm	3095 mm	545 mm	8050 mm
	6000 mm	3295 mm	745 mm	8550 mm
	6500 mm	3495 mm	945 mm	9050 mm
	7000 mm	3695 mm	1145 mm	9550 mm
	7500 mm	3895 mm	1345 mm	10050 mm
	8000 mm	4095 mm	1545 mm	10550 mm
	8500 mm	4295 mm	1745 mm	11050 mm
	9000 mm	4495 mm	1945 mm	11550 mm
	9250 mm	4595 mm	2045 mm	11800 mm
	9500 mm	4695 mm	2145 mm	12050 mm
EKX 516	**Lift (h3)**	**Retracted mast height (h1)**	**Free lift (h2)**	**Extended mast height (h4)**

Triplex mast DZ	11000 mm	5215 mm	2665 mm	13550 mm
	11500 mm	5395 mm	2845 mm	14050 mm
	12000 mm	5565 mm	3015 mm	14550 mm
	12500 mm	5750 mm	3200 mm	15050 mm
	13000 mm	5950 mm	3400 mm	15550 mm
	13500 mm	6250 mm	3700 mm	16050 mm
	14000 mm	6550 mm	4000 mm	16550 mm
	14500 mm	6850 mm	4300 mm	17050 mm
EKX 516k, EKX 516	**Lift (h3)**	**Retracted mast height (h1)**	**Free lift (h2)**	**Extended mast height (h4)**
Duplex mast ZT	10000 mm	6405 mm		12550 mm
	10500 mm	6655 mm		13050 mm
Triplex mast DZ	10000 mm	4875 mm	2325 mm	12550 mm
	10500 mm	5045 mm	2495 mm	13050 mm

VDI table

Characteristic	1.1	Manufacturer (abbreviated description)			Jungheinrich				
	1.2	Manufacturer's type designation			EKX 410	EKX 412	EKX 514	EKX 516k	EKX 516
	1.3	Drive type			electric				
	1.4	Operation			Order picker / tri-lateral stacker				
	1.5	Load capacity/load	Q	kg	1000	1200	1400	1600	
	1.6	Load centre distance	c	mm	600				
	1.8	Load distance, centre of drive axle to fork	x	mm	450		445		
	1.9	Wheelbase	y	mm	1807		1840	1950	2220
	1.10	Centre drive wheel/counterweight	z	mm	320		282		
Weights	2.1.1	Service weight (incl. battery)		kg	5515	5895	6350	6750	7900
	2.2	Axle load laden front/rear		kg	4895 / 1630	5400 / 1705	5720 / 1880	6190 / 2060	6590 / 2810
	2.3	Axle load unladen front/rear		kg	3270 / 2245	3450 / 2445	3850 / 2500	3980 / 2770	4480 / 3420
Wheels/chassis	3.1	Tyres			Besthane				
	3.2	Tyre size, front			Ø 295 x 144		Ø 380 x 192		
	3.3	Tyre size, rear			Ø 343 x 110		Ø 400 x 160		
	3.5	Wheels, number front/back (x=driven)			2 / 1 x		2 / 1x		
	3.6	Tread width, front	b10	mm	1306		1258		
Basic dimensions	4.2	Retracted mast height (h1)	h1	mm	2850		2955		
	4.3	Free lift (h2)	h2	mm	0				
	4.4	Lift (h3)	h3	mm	3500				
	4.5	Extended mast height (h4)	h4	mm	6050				
	4.7	Height of overhead guard (cab)	h6	mm	2550				
	4.8	Seat height/stand height	h7	mm	430				
	4.11	Additional lift	h9	mm	1780				
	4.14	Stand height, elevated	h12	mm	3930				
	4.19	Total length	l1	mm	3665			3775	4045
	4.20	Length including fork shank	l2	mm	3379			3489	3759
	4.21.1	total width	b1	mm	1210				
	4.21.2	total width	b2	mm	1450				
	4.22	Fork dimensions	s/ e/l	mm	40 x 120 x 1200		50 x 120 x 1200		
	4.23	Fork carriage connection class			2B				
	4.24	Fork carriage width	b3	mm	880				
	4.25	Width across forks	b5	mm	856				
	4.29	Reach, lateral		mm	1300				
	4.30	Reach, lateral from centre of truck		mm	480				
	4.31	Ground clearance laden under mast	m1	mm	80				
	4.32	Ground clearance centre of wheelbase	m2	mm	80				
	4.35	Turning radius	Wa	mm	2122			2232	2502
	4.38	Distance swivelling fork pivot point		mm	1103				
	4.38.4	Pallet width		mm	1200				
	4.38.5	Pallet length		mm	1200				

Performance data	5.1	Travel speed laden/unladen	km/h	10.5 / 10.5			12 / 12	
	5.2	Lift speed laden/unladen	m/s	0.4 / 0.4		0.45 / 0.45	0.6 / 0.6	
	5.3	Lowering speed laden/unladen	m/s	0.4 / 0.4		0.5 / 0.5		
	5.4	Reach speed laden/unladen	m/s	0.4 / 0.4		0.4 / 0.5		
	5.10	Service brake		regenerative				
	5.11	Parking brake		Electric sprung-loaded				
Electric motor/electronics	6.1	Drive motor, performance S2 60 min	kW	6.9		9		
	6.2	Lift motor, performance with S3	kW	10		25		
	6.3	Battery according to DIN 43531/35/36		6 PzS 750	6 PzS 930	3 PzS 465	4 PzS 620	6 PzS 930
	6.4	Battery voltage/nominal capacity	V / Ah	48 / 750	48 / 930	80 / 465	80 / 620	80 / 930
	6.5	Battery weight	kg	1011	1388	1238	1558	2178
Other	8.1	Type of drive control		AC synchronous reluctance				
	10.5	Steering version		electric				
	10.7	Sound pressure level according to EN12053	dB (A)	64				

- This data sheet according to VDI guideline 2198 only states the technical values of the standard truck. Different tyres, other masts, additional equipment etc. may result in different values.

The German production facilities in Norderstedt, Moosburg and Landsberg are certified as well as our Genuine Parts Center in Kaltenkirchen.

ISO 9001
ISO 14001

Jungheinrich fork lift trucks meet European safety requirements.

CE

JUNGHEINRICH