Low level order pickers

ECE 225 / 227 / 230

Lift height: 125 mm / Load capacity: 2500-3000 kg

LI-ION technology

JUNGHEINRICH

ECE 225 / 227 / 230

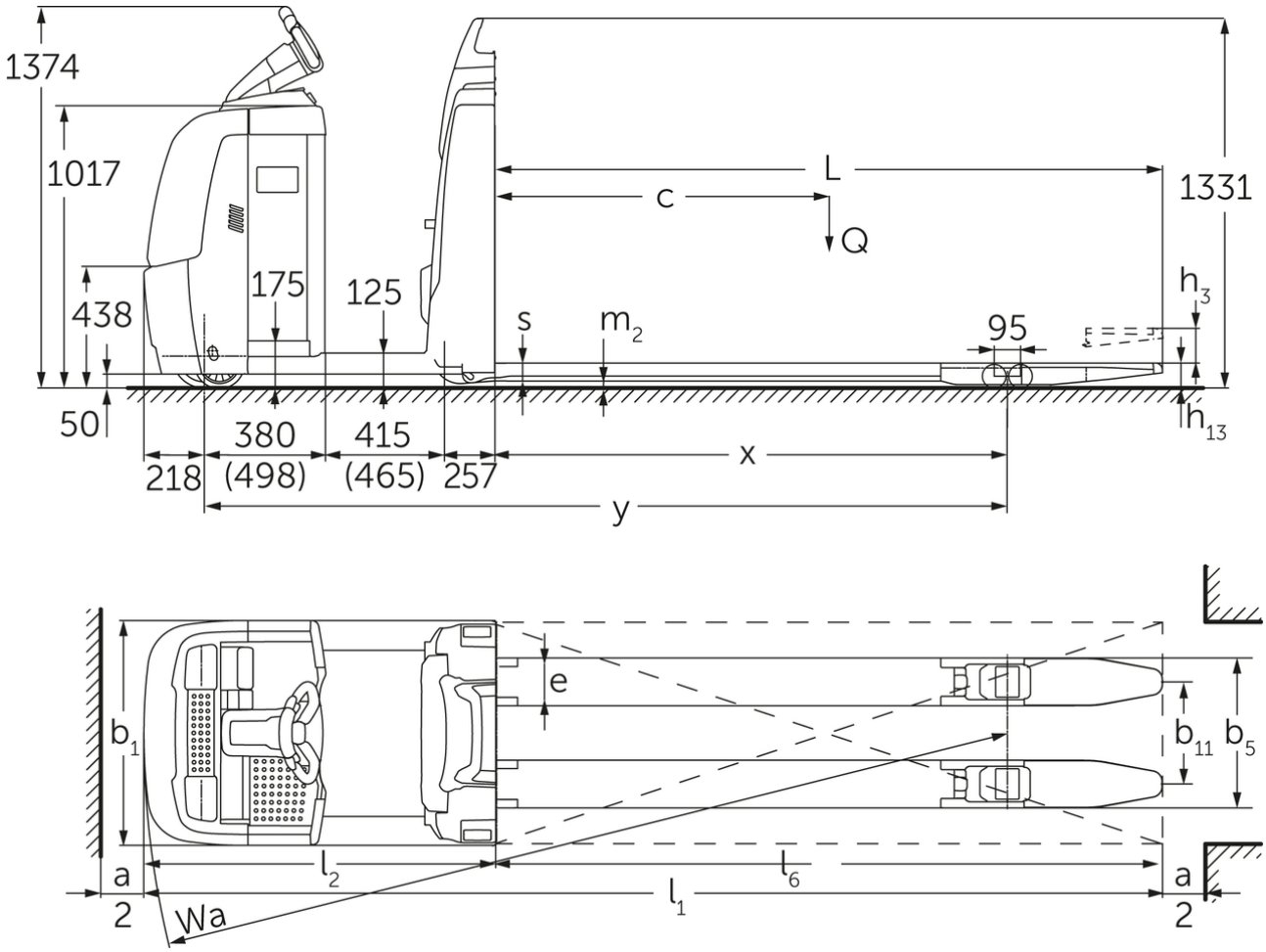

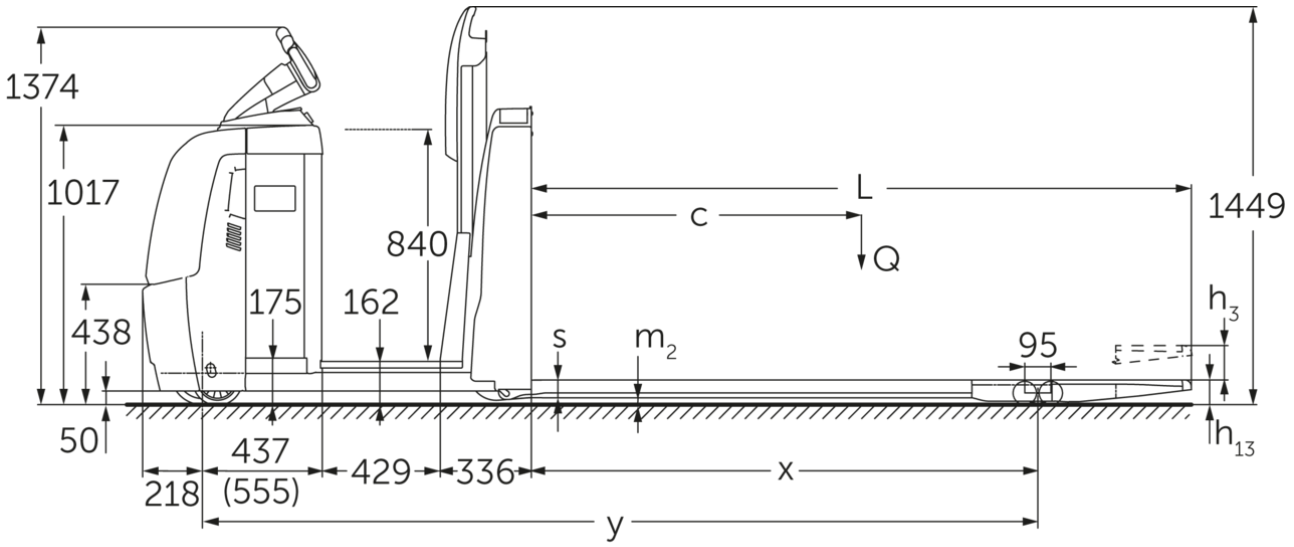
1374
1017
840
L
c
Q
1449
h3
438
175
162
s
m2
95
50
h13
437
(555)
218
429
336
x
y

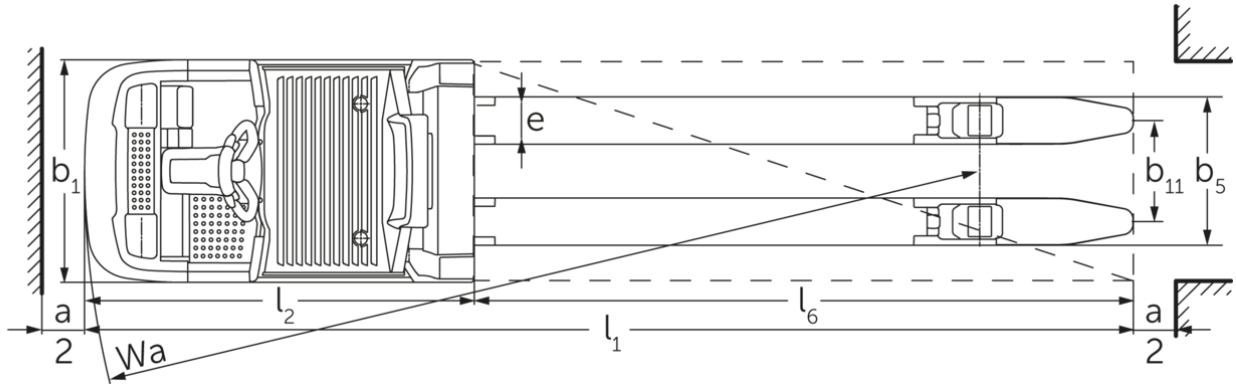
b1
e
e
b11
b5
a
2
l2
l6
l1
Wa
a
2

VDI table

Characteristic	1.1	Manufacturer (abbreviated description)			Jungheinrich			
	1.2	Manufacturer's type designation			ECE 225			
	1.3	Drive			electric			
	1.4	Operation			Order pickers			
	1.5	Load capacity/load	Q	kg	2500		2700	3000
	1.6	Load centre distance	c	mm	1200			1800
	1.8	Load distance, centre of drive axle to fork	x	mm	1518			2690
	1.9	Wheelbase	y	mm	2570	2720	2570	3849
Weights	2.1.1	Service weight (incl. battery)		kg	975	1110	975	1550
	2.2	Axle load laden front/rear		kg	1130 / 2345	1135 / 2475	1130 / 2345	1720 / 2820
	2.3	Axle load unladen front/rear		kg	763 / 212	847 / 263	763 / 212	1080 / 460
Wheels/suspension system	3.1	Tyres			Polyurethane (PU)			
	3.2	Tyre size, front			Ø 230 x 78			
	3.3	Tyre size, rear			Ø 85 x 85			
	3.4	Additional wheels			Ø 180 x 65			
	3.5	Wheels, number front/back (x=driven)			1+1x/4			
	3.6	Tread width, front	b10	mm	481			
	3.7	Tread width, rear	b11	mm	338			378
	3.7.1	2. Tread width, rear		mm	368			-
	3.7.2	3. Tread width, rear		mm	498			-
Basic dimensions	4.4	Lift (h3)	h3	mm	125			
	4.9	Height of tiller handle in drive position min./max.	h14	mm	1374 / 1418			
	4.14	Stand height, elevated	h12	mm	-	1002	-	
	4.15	Height, lowered	h13	mm	90			
	4.19	total length	l1	mm	3670	3820	3670	5000
	4.20	Length including fork shank	l2	mm	1270	1420	1270	1400
	4.21.1	total width	b1	mm	810			830
	4.22	Fork dimensions	s/ e/l	mm	60 x 172 x 2400			70 x 200 x 3600
	4.25	Width across forks	b5	mm	510			580
	4.32	Ground clearance centre of wheelbase	m2	mm	25			
	4.34.2	Aisle width (pallet 800x1200 length)	Ast	mm	3870	4020	3870	5200
	4.35	Turning radius	Wa	mm	2788	2938	2788	4090
Performance data	5.1	Travel speed laden/unladen (Efficiency | drivePLUS)		km/h	9.2 / 12.5 | 9.2 / 14			- / - | 9.2 / 14
	5.2	Lift speed laden/unladen		m/s	0.07 / 0.1			
	5.3	Lowering speed laden/unladen		m/s	0.07 / 0.06			
	5.8	Max. gradeability laden/unladen (Efficiency | drivePLUS)		%	6 / 15 | 6 / 15			- / - | 6 / 15
	5.10	Service brake			generative			

E-motor/Electronics	6.1	Drive motor, performance S2 60 min (Efficiency | drivePLUS)	kW	2.8 | 3.2			- | 3.2
	6.2	Lift motor, performance with S3	kW	1.5			
	6.4	Battery voltage/nominal capacity	V / Ah	24 / 465			24 / 560
	6.5	Battery weight	kg	370			470
	6.6.1	Energy consumption according to EN cycle (Efficiency | PLUS)	kWh/h	0.41 | 0.47			- | -
	6.6.2	CO2 equivalent according to EN ISO 23308 (Efficiency | PLUS)	kg/h	0.22 | 0.3			- | -
	6.7	Throughput (Efficiency | PLUS)	t/h	170 | 180			- | 170
	6.8.1	Energy consumption with max. throughput (Efficiency | PLUS)	kWh/h	1.38 | 1.41	1.39 | 1.47	1.38 | 1.41	- | 1.39
Other	8.1	Type of drive control		AC			
	10.5	Steering version		electric			
	10.7	Sound pressure level according to EN12053	dB (A)	62			

- This data sheet according to VDI guideline 2198 only states the technical values of the standard truck. Different tyres, other masts, additional equipment etc. may result in different values.

The values in the table apply to the L battery compartment, drivePLUS performance package, fork length 2,400 mm, raised load section.
- VDI no. 1.8: with lowered load section: x + 82 mm.
- VDI no. 1.9: with XL or XL (ERE) battery compartment: y + 118 mm; with extended stand-on platform: y + 50 mm; with lowered load section: y + 82 mm.
- VDI no. 4.14: ECE HP: h12 see diagram, dimension 840 mm + 162 mm = 1,002 mm.
- VDI no. 4.19: with XL or XL (ERE) battery compartment: l1 + 118 mm; with extended stand-on platform: l1 + 50 mm.
- VDI no. 4.20: with XL or XL (ERE) battery compartment: l2 + 118 mm; with extended stand-on platform: l2 + 50 mm.
- VDI no. 4.34.2: with XL or XL (ERE) battery compartment: aisle width + 118 mm; with extended stand-on platform: aisle width + 50 mm; diagonal as per VDI: aisle width + 94 mm.
- VDI no. 4.35: with XL or XL (ERE) battery compartment: Wa + 118 mm; with extended stand-on platform: Wa + 50 mm; with lowered load section: Wa + 82 mm.
- VDI no. 6.2: with S3 10%.
- VDI no. 6.4: with XL battery compartment: 24 V / 620 Ah.
- VDI no. 6.5: with XL battery compartment: 460 kg.
- VDI no. 6.6.1 for ECE 225 and ECE 225 HP: 0.45 kWh/h.

The German production facilities in Norderstedt, Moosburg and Landsberg are certified as well as our Genuine Parts Center in Kaltenkirchen.

ISO 9001
ISO 14001

Jungheinrich fork lift trucks meet European safety requirements.

CE

JUNGHEINRICH