Electric reach truck

ETV 414i–425i

Lift height: 5000-14000 mm / Load capacity: 1400-2500 kg

LI-ION technology

JUNGHEINRICH

ETV 414i–425i

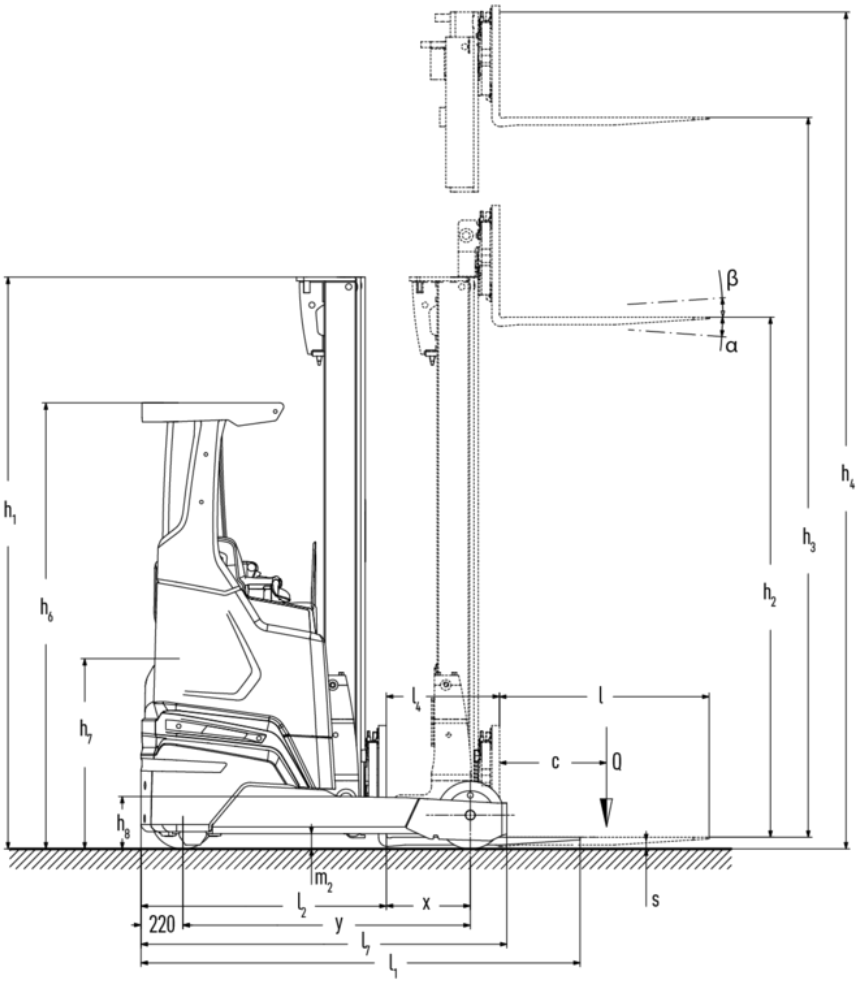

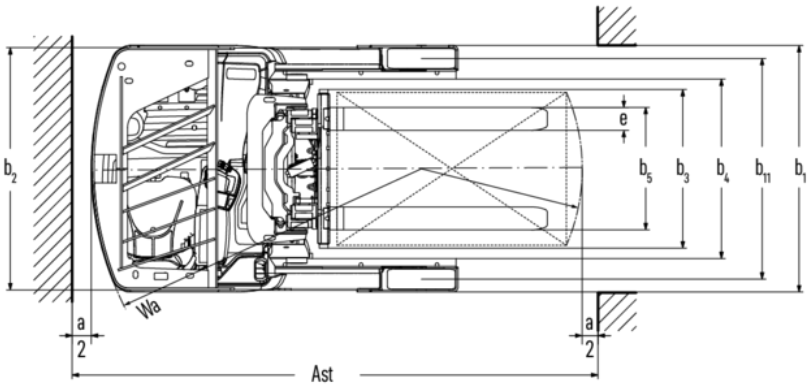

ETV 414i–425i

ETV 414i, ETV 416i	Lift (h3)	Retracted mast height (h1)	Free lift (h2)	Extended mast height (h4)	Forward/ backward tilt of fork carriage
Fork tilt / Triplex mast DZ-V / cold-formed	5000 mm	2200 mm	1546 mm	5654 mm	2 / 5 °
	5300 mm	2300 mm	1646 mm	5954 mm	2 / 5 °
	5600 mm	2400 mm	1746 mm	6254 mm	2 / 5 °
	5900 mm	2500 mm	1846 mm	6554 mm	2 / 5 °
	6200 mm	2600 mm	1946 mm	6854 mm	2 / 5 °
	6500 mm	2700 mm	2046 mm	7154 mm	2 / 5 °
	6800 mm	2800 mm	2146 mm	7454 mm	2 / 5 °
	7100 mm	2900 mm	2246 mm	7754 mm	2 / 5 °
	7400 mm	3000 mm	2346 mm	8054 mm	2 / 5 °
	7700 mm	3100 mm	2446 mm	8354 mm	2 / 5 °
	8000 mm	3200 mm	2546 mm	8654 mm	2 / 5 °
	8300 mm	3300 mm	2646 mm	8954 mm	2 / 5 °
	8420 mm	3340 mm	2686 mm	9074 mm	2 / 5 °
	8720 mm	3440 mm	2786 mm	9374 mm	2 / 5 °
	9020 mm	3540 mm	2886 mm	9674 mm	2 / 5 °
	9410 mm	3670 mm	3016 mm	10064 mm	2 / 5 °
	9920 mm	3840 mm	3186 mm	10574 mm	2 / 5 °
	10250 mm	3950 mm	3296 mm	10904 mm	2 / 5 °
	10520 mm	4040 mm	3386 mm	11174 mm	2 / 5 °
	10700 mm	4100 mm	3446 mm	11354 mm	2 / 5 °

ETV 420i, ETV 425i	Lift (h3)	Retracted mast height (h1)	Free lift (h2)	Extended mast height (h4)	Forward/ backward tilt of fork carriage
Fork tilt / Triplex mast DZ-V / cold-formed	6200 mm	2700 mm	1970 mm	6930 mm	2 / 5 °
	6500 mm	2800 mm	2070 mm	7230 mm	2 / 5 °
	6800 mm	2900 mm	2170 mm	7530 mm	2 / 5 °
	7400 mm	3100 mm	2370 mm	8130 mm	2 / 5 °
	7700 mm	3200 mm	2470 mm	8430 mm	2 / 5 °
	8000 mm	3300 mm	2570 mm	8730 mm	2 / 5 °

	8420 mm	3440 mm	2710 mm	9150 mm	2 / 5 °
	8720 mm	3540 mm	2810 mm	9450 mm	2 / 5 °
	9110 mm	3670 mm	2940 mm	9840 mm	2 / 5 °
	9620 mm	3840 mm	3110 mm	10350 mm	2 / 5 °
	9950 mm	3950 mm	3220 mm	10680 mm	2 / 5 °
	10220 mm	4100 mm	3370 mm	10950 mm	2 / 5 °
	10520 mm	4200 mm	3470 mm	11250 mm	2 / 5 °
	10700 mm	4260 mm	3530 mm	11430 mm	2 / 5 °
	10880 mm	4320 mm	3590 mm	11610 mm	2 / 5 °
	11120 mm	4400 mm	3670 mm	11850 mm	2 / 5 °
	11510 mm	4530 mm	3800 mm	12240 mm	2 / 5 °
	12020 mm	4700 mm	3970 mm	12750 mm	2 / 5 °
	12530 mm	4870 mm	4140 mm	13260 mm	2 / 5 °
	12830 mm	4970 mm	4240 mm	13560 mm	2 / 5 °
	13000 mm	5026 mm	4296 mm	13728 mm	2 / 5 °

VDI table

Characteristic	1.1	Manufacturer (abbreviated description)			Jungheinrich			
	1.2	Manufacturer's type designation			ETV 414i	ETV 4i		
	1.3	Drive			electric			
	1.4	Operation			Sideways-seated			
	1.5	Load capacity/load	Q	kg	1400	1600	2000	2500
	1.6	Load centre distance	c	mm	600			
	1.8	Load distance, centre of drive axle to fork	x	mm	304	354	401	556
	1.8.1	Load distance, centre of drive axle to fork, mast extended		mm	205		230	
	1.9	Wheelbase	y	mm	1400	1450	1508	1663
Weights	2.1	tare weight		kg	3380	3500	3930	4430
Wheels/suspension system	3.1	Tyres			Polyurethane (PU)			
	3.2	Tyre size, front			Ø 343 x 114			Ø 343 x 140
	3.3	Tyre size, rear			Ø 285 x 100		Ø 355 x 106	Ø 355 x 135
	3.5	Wheels, number front/back (x=driven)			1x/2			
	3.7	Tread width, rear	b11	mm	1148		1155	1184
Basic dimensions	4.1	Forward/backward tilt of mast	a/ß	°	2 / 5			
	4.2	Retracted mast height (h1)	h1	mm	2200		2700	
	4.3	Free lift (h2)	h2	mm	1546		1970	
	4.4	Lift (h3)	h3	mm	5000		6200	
	4.5	Extended mast height (h4)	h4	mm	5654		6930	
	4.7	Height of overhead guard (cab)	h6	mm	2340			
	4.8	Seat height/stand height	h7	mm	1217			
	4.10	Height of support arms	h8	mm	282		283	284
	4.19	total length	l1	mm	2466		2477	
	4.20	Length including fork shank	l2	mm	1316		1327	
	4.21.1	total width	b1	mm	1290			1348
	4.21.2	total width	b2	mm	1290			
	4.22	Fork dimensions	s/e/l	mm	40 x 120 x 1150		50 x 140 x 1150	
	4.24	Fork carriage width	b3	mm	830			
	4.25.1	Width across forks (min./max.)	b5	mm	335 / 730		356 / 750	
	4.26	Width between support arms/loading areas	b4	mm	940			
	4.28	Reach distance		mm	506	556	629	784
	4.32	Ground clearance centre of wheelbase	m2	mm	80			
	4.34.1	Aisle width (pallet 1000×1200 sideways)	Ast	mm	2739	2752	2776	2829
	4.34.2	Aisle width (pallet 800x1200 length)	Ast	mm	2801	2806	2822	2841
	4.35	Turning radius	Wa	mm	1620	1670	1728	1883
	4.37	Length over the support arms	L7	mm	1780	1830	1920	2075

Performance data	5.1	Travel speed laden/unladen	km/h	14 / 14			
	5.2	Lift speed laden/unladen	m/s	1.32 / 1.6		1.06 / 1.4	0.81 / 1.4
	5.3	Lowering speed laden/unladen	m/s	1.2 / 1.2			
	5.4	Reach speed laden/unladen	m/s	0.3 / 0.3			
	5.7	Gradeability laden/unladen	%	9 / 13	8 / 12	7 / 11	
	5.8	Max. gradeability laden/unladen	%	10 / 15			
	5.9	Acceleration time laden/unladen	s	4.6 / 4.3		5.3 / 4.7	5.4 / 4.7
	5.10	Service brake		electric			
E-motor/Electronics	6.1	Drive motor, performance S2 60 min	kW	9.5			
	6.2	Lift motor, performance with S3	kW	31			
	6.3	Battery according to DIN 43531/35/36		Jungheinrich Li-ion			
	6.4	Battery voltage/nominal capacity	V	51.2			
	6.5	Battery weight	kg	200		300	
	6.6.1	Energy consumption according to EN cycle	kWh/h	3.6	3.64	4.65	4.75
	6.6.2	CO2 equivalent according to EN ISO 23308	kg/h	1.95	1.97	2.51	2.57
	6.7	Throughput	t/h	75.6	86.4	100	121
	6.8	Turnover efficiency according to VDI 2198	t/kWh	14.8	16.3	15.7	17.8
	6.8.1	Energy consumption with max. throughput	kWh/h	5.1	5.3	6.38	6.8
Other	8.1	Type of drive control		3-phase AC			
	10.1	Operating pressure for attachment	bar	150			
	10.2	Oil flow for attachments	l/min	20			

- This data sheet according to VDI guideline 2198 only states the technical values of the standard truck. Different tyres, other masts, additional equipment etc. may result in different values.

The German production facilities in Norderstedt, Moosburg and Landsberg are certified as well as our Genuine Parts Center in Kaltenkirchen.

ISO 9001
ISO 14001

Jungheinrich fork lift trucks meet European safety requirements.

CE

JUNGHEINRICH