Mobile robot low-level applications

EAE 212a

Lift height: 250 mm / Load capacity: 1200 kg

LI ION technology

EAE 212a

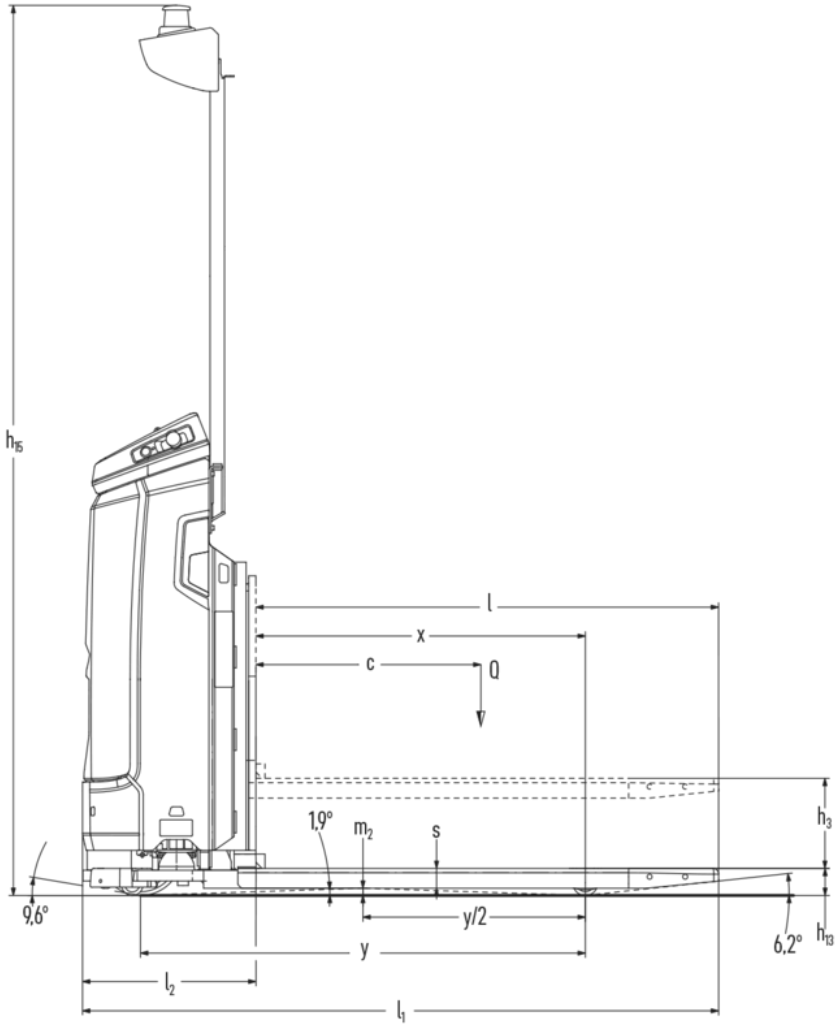
h15
l
x
c
Q
1,9°
m2
s
h3
9,6°
y/2
y
6,2°
h13
l2
l1

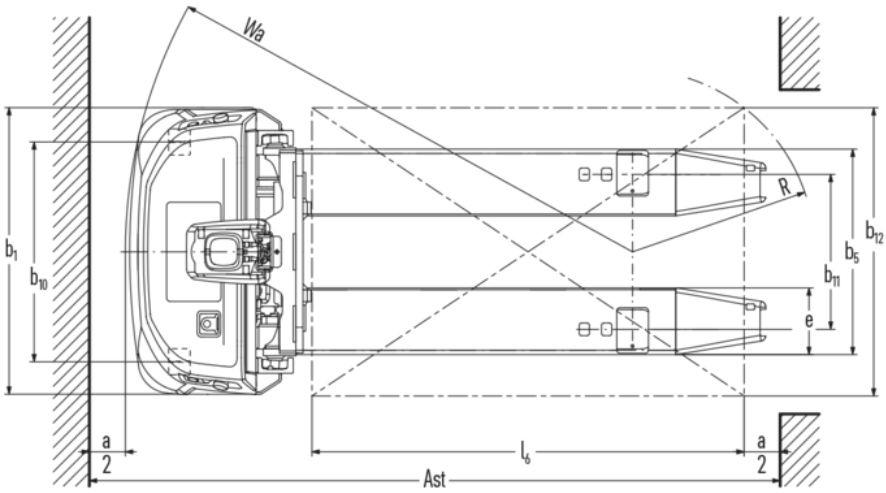
Wa
R
b1
b10
b12
b5
b11
e
a
2
l6
a
2
Ast

VDI table

Characteristic	1.1	Manufacturer (abbreviated description)			Jungheinrich
	1.2	Manufacturer's type designation			EAE 2a
	1.3	Drive			electric
	1.4	Operation			Automatic
	1.5	Load capacity/load	Q	kg	1200
	1.6	Load centre distance	c	mm	625
	1.8	Load distance, centre of drive axle to fork	x	mm	915
	1.9	Wheelbase	y	mm	1235
Weights	2.1.1	Service weight (incl. battery)		kg	650
	2.2	Axle load laden front/rear		kg	800 / 1050
	2.3	Axle load unladen front/rear		kg	503 / 147
Wheels/suspension system	3.1	Tyres			Polyurethane (PU)
	3.2	Tyre size, front			ø230x65
	3.3	Tyre size, rear			ø70x75
	3.4	Additional wheels			ø60x35
	3.5	Wheels, number front/back (x=driven)			1(x) + 2 / 2
	3.6	Tread width, front	b10	mm	610
	3.7	Tread width, rear	b11	mm	430
Basic dimensions	4.2.1	total height	h15	mm	2470
	4.4	Lift (h3)	h3	mm	250
	4.15	Height, lowered	h13	mm	75
	4.19	total length	l1	mm	1766
	4.20	Length including fork shank	l2	mm	481
	4.21.1	total width	b1	mm	795
	4.22	Fork dimensions	s/e/l	mm	55 x 185 x 1285
	4.25	Width across forks	b5	mm	570
	4.32	Ground clearance centre of wheelbase	m2	mm	20
Performance data	5.1	Travel speed laden/unladen		km/h	6 / 6
	5.2	Lift speed laden/unladen		m/s	0.1 / 0.17
	5.3	Lowering speed laden/unladen		m/s	0.08 / 0.07
	5.7	Gradeability laden/unladen		%	0 / 0
	5.10	Service brake			generative
E-motor/Electronics	6.1	Drive motor, performance S2 60 min		kW	2
	6.2	Lift motor, performance with S3		kW	2.2
	6.3	Battery according to DIN 43531/35/36			no
	6.4	Battery voltage/nominal capacity		V / Ah	25.6 / 130
	6.5	Battery weight		kg	55

Other	10.7	Sound pressure level according to EN12053	dB (A)	54

- This data sheet according to VDI guideline 2198 only states the technical values of the standard truck. Different tyres, other masts, additional equipment etc. may result in different values.

The values in the table refer to a vehicle with a load overhang of 25 mm.

- VDI No. 1.6: With a load overhang of 50 mm: c = 650 mm.
- VDI No. 4.19: With a load overhang of 50 mm: l1 = 1816 mm.
- VDI No. 4.2.1: Total height with optional bracket folded in: 1891 mm; folded out: 2470 mm.
- VDI No. 4.22: With a load overhang of 50 mm: s/e/l = 55 / 185 / 1335 mm.
- VDI No. 4.34.2: With a load overhang of 50 mm: Ast = 2130 mm.
- VDI No. 5.2: Lifting speed with load measured at a nominal load of 1.2 t.
- VDI No. 5.3: Lowering speed with load measured at a nominal load of 1.2 t.