Electric tow tractor

EZS 7280

Towing capacity: 28000 kg

LI-ION technology

JUNGHEINRICH

EZS 7280

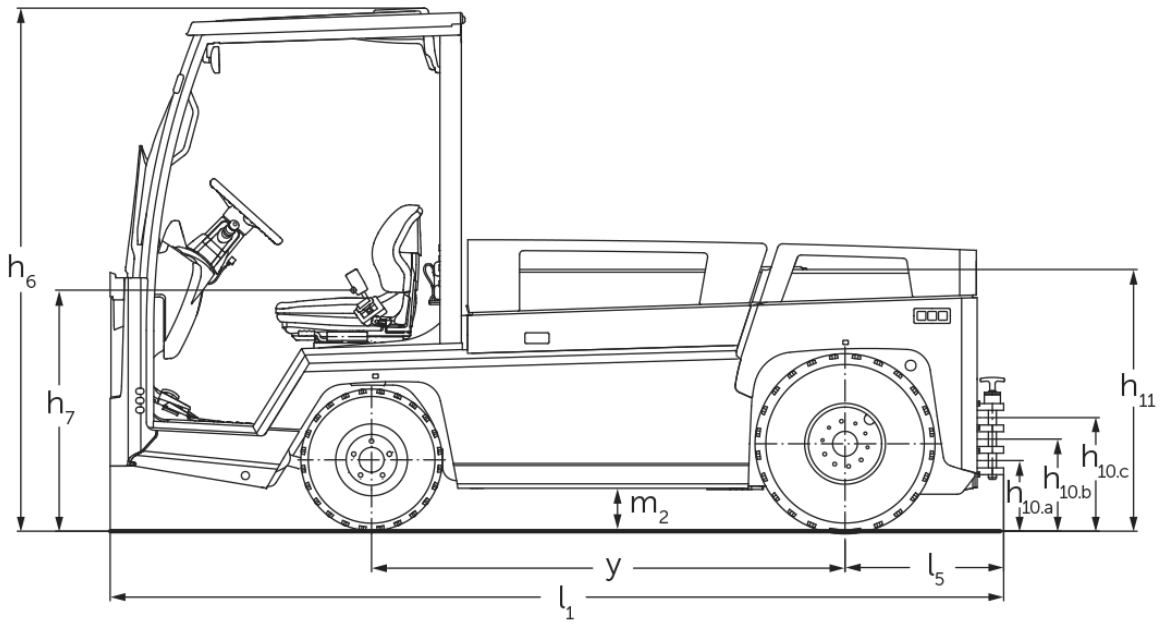

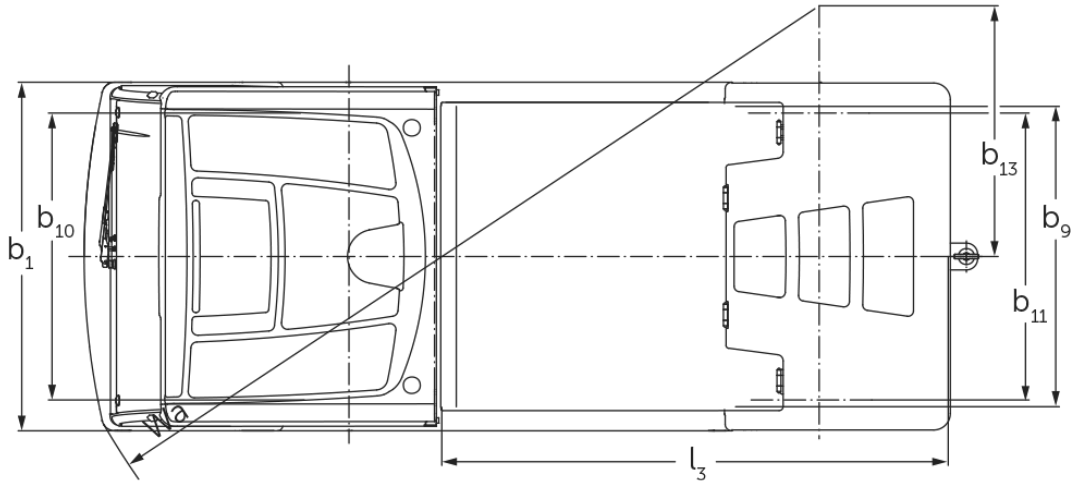

Pulling ability

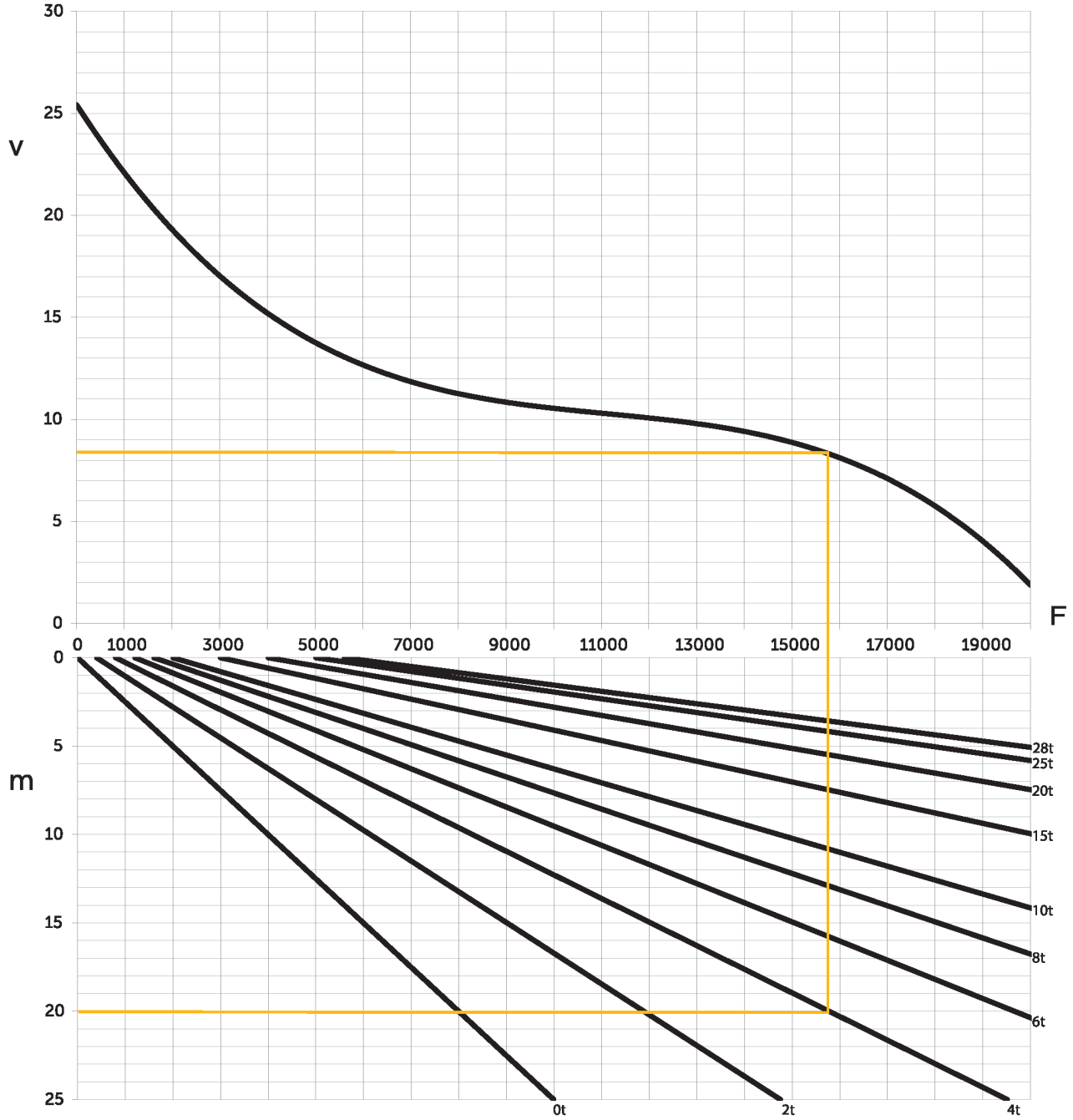

v=speed [km/h], m=incline [%], F=drawbar pull [N]

VDI table

Characteristic	1.1	Manufacturer (abbreviated description)			Jungheinrich	
	1.2	Manufacturer's type designation			EZS 7280	EZS 7280 XL
	1.3	Drive type			electric	
	1.4	Operation			Seat	
	1.5.3	Towing capacity	Q	kg	28000	
	1.7	Rated drawbar pull		N	5600	
	1.9	Wheelbase	y	mm	1465	1755
Weights	2.1.1	Service weight (incl. battery)		kg	4088	4796
	2.3	Axle load unladen front/rear		kg	2100 / 1988	2446 / 2350
Wheels/chassis	3.1	Tyres			Air	
	3.2	Tyre size, front			6.00 R9	
	3.3	Tyre size, rear			7.00 R12	
	3.5	Wheels, number front/back (x=driven)			2 / 2 x	
	3.6	Tread width, front	b10	mm	1070	
	3.7	Tread width, rear	b11	mm	1070	
Basic dimensions	4.7	Height of overhead guard (cab)	h6	mm	1970	
	4.8	Seat height/stand height	h7	mm	880	
	4.12	Coupling height	h10	mm	240	
	4.12.1	2. Coupling height		mm	320	
	4.12.2	3. Coupling height		mm	400	
	4.13	Loading height, unladen		mm	1000	
	4.16	Loading area length	l3	mm	1536	1826
	4.17	Overhang length		mm	610	
	4.18	Loading area width	b9	mm	1090	
	4.19	Total length	l1	mm	3045	3335
	4.21.1	total width	b1	mm	1300	
	4.32	Ground clearance centre of wheelbase	m2	mm	150	
	4.35	Turning radius	Wa	mm	2847	3178
	4.36	Smallest pivot point distance	b13	mm	935	1095
Performance data	5.1	Travel speed laden/unladen		km/h	12 / 25	
	5.1.1	Reverse travel speed with/without load		km/h	10 / 10	
	5.5	Drawbar pull laden/unladen		N	5600 / 5600	
	5.6	Max. drawbar pull laden/unladen		N	19000 / 19000	
	5.10	Service brake			hydraulic/electric	

Electric motor/electronics	6.1	Drive motor, performance S2 60 min	kW	20	
	6.4	Battery voltage/nominal capacity	V / Ah	80 / 620	80 / 930
	6.5	Battery weight	kg	1560	2180
	6.6	Energy consumption according to VDI cycle	kWh/h	0	
Other	8.1	Type of drive control		3-phase AC technology	
	10.7	Sound pressure level according to EN12053	dB (A)	60	

- This data sheet according to VDI guideline 2198 only states the technical values of the standard truck. Different tyres, other masts, additional equipment etc. may result in different values.

- VDI no. 4.12: the value for the coupling height applies to a triple coupling
- VDI no. 4.19: the specification for the overall length includes a triple coupling
- VDI no. 5.1: with a towing capacity of 25 t, the travel speed is 13 km/h
- VDI no. 10.7: the specification applies with deactivated ventilation / heating

The German production facilities in Norderstedt, Moosburg and Landsberg are certified as well as our Genuine Parts Center in Kaltenkirchen.

ISO 9001
ISO 14001

Jungheinrich fork lift trucks meet European safety requirements.

CE

JUNGHEINRICH