

Mobile robot load towing indoor

EZS 350a

Dragkraft: 5000 kg

LI-ION technology

EZS 350a

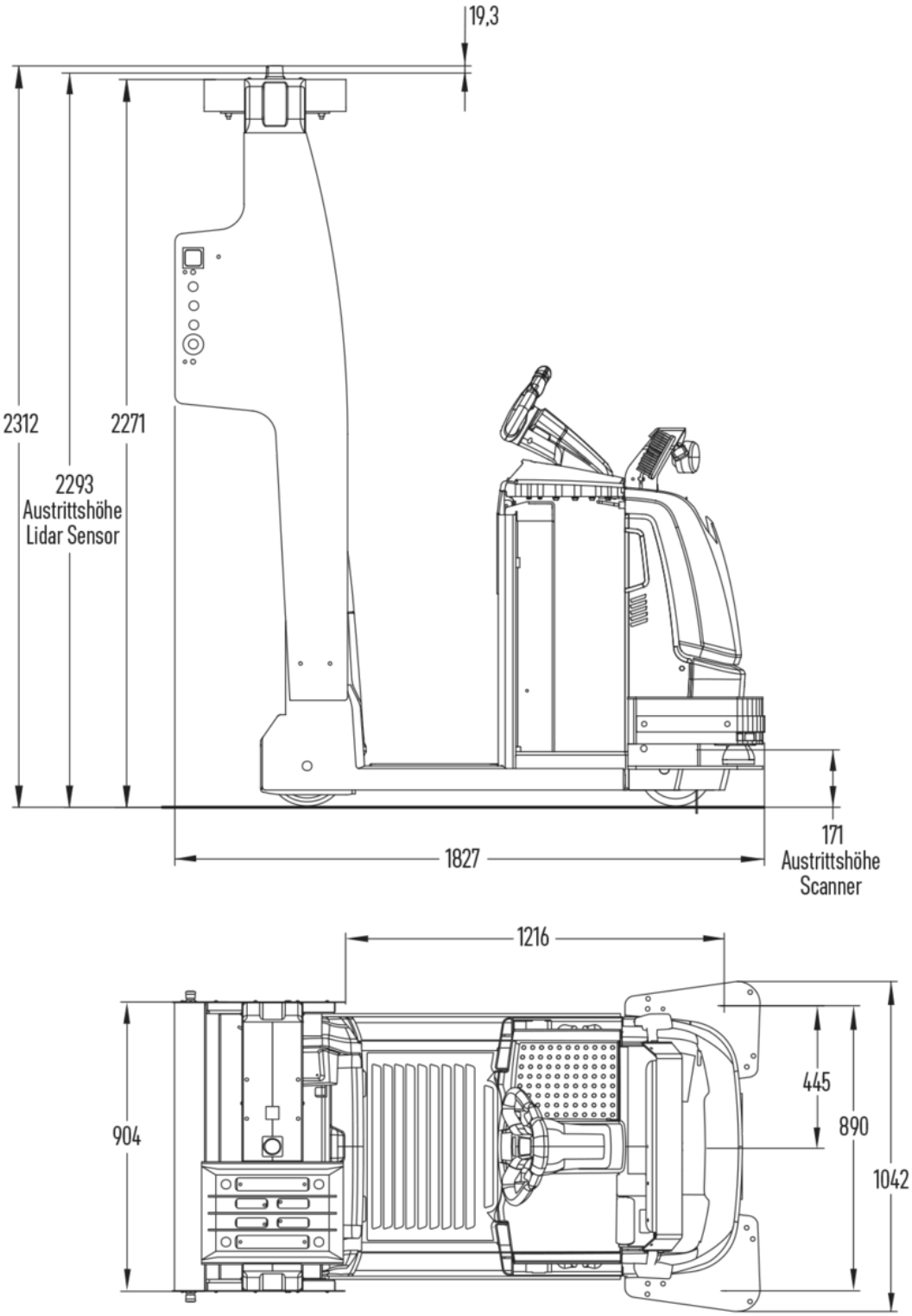
19,3
2312
2271
2293
Austrittshöhe
Lidar Sensor
1827
171
Austrittshöhe
Scanner
1216
904
445
890
1042

VDI bord

- VDI-nr 5.5: Nominell dragkraft.