

Electric pedestrian pallet truck

AME 20

Lift height: 115 mm / Load capacity: 2000 kg

LI-ION technology

AME 20

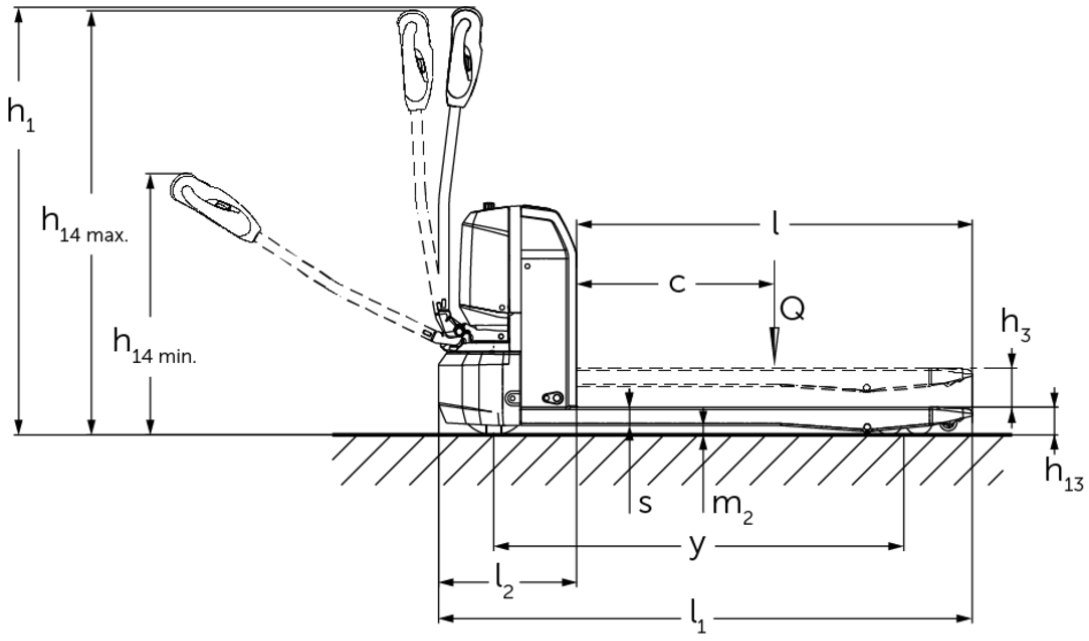
h1
h14 max.
h14 min.
l
c
Q
h3
h13
s
m2
y
l2
l1

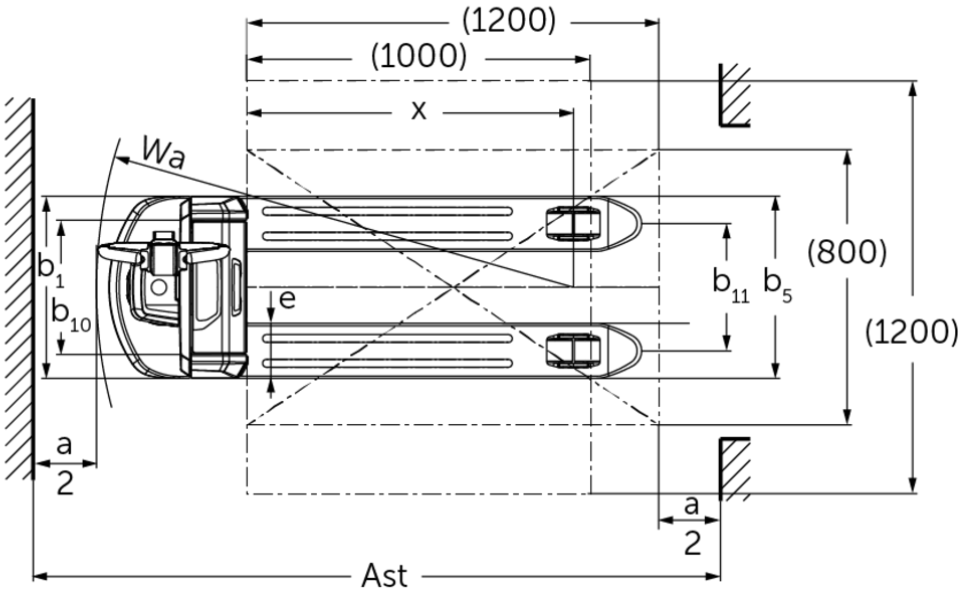
(1200)
(1000)
x
Wa
b1
b10
e
b11
b5
(800)
(1200)
a
2
a
2
Ast

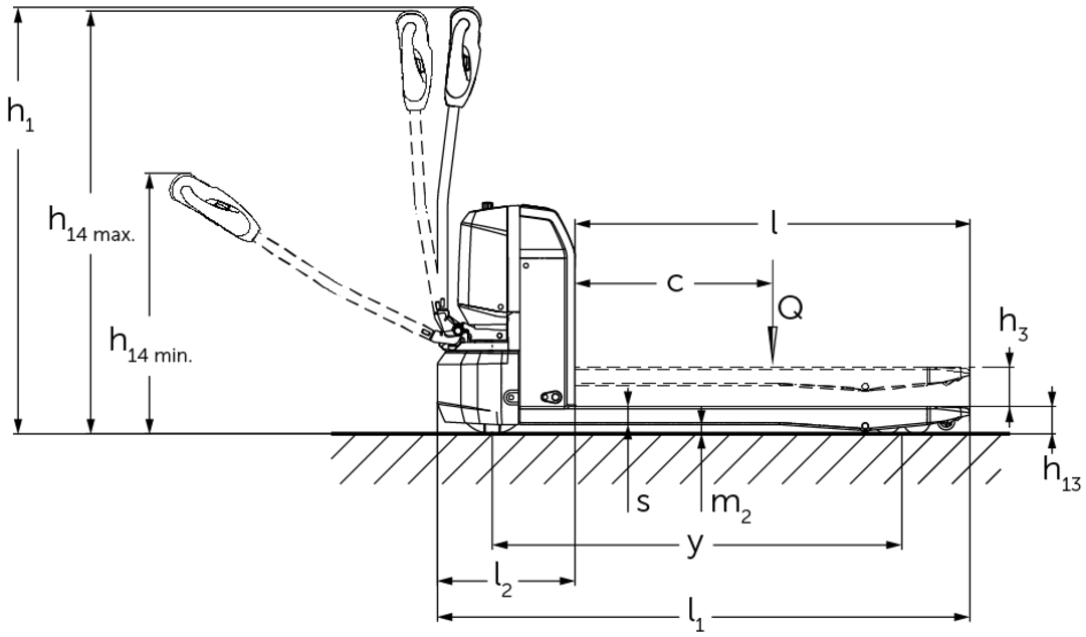
h1
h14 max.
h14 min.
l
c
Q
h3
h13
s
m2
y
l2
l1

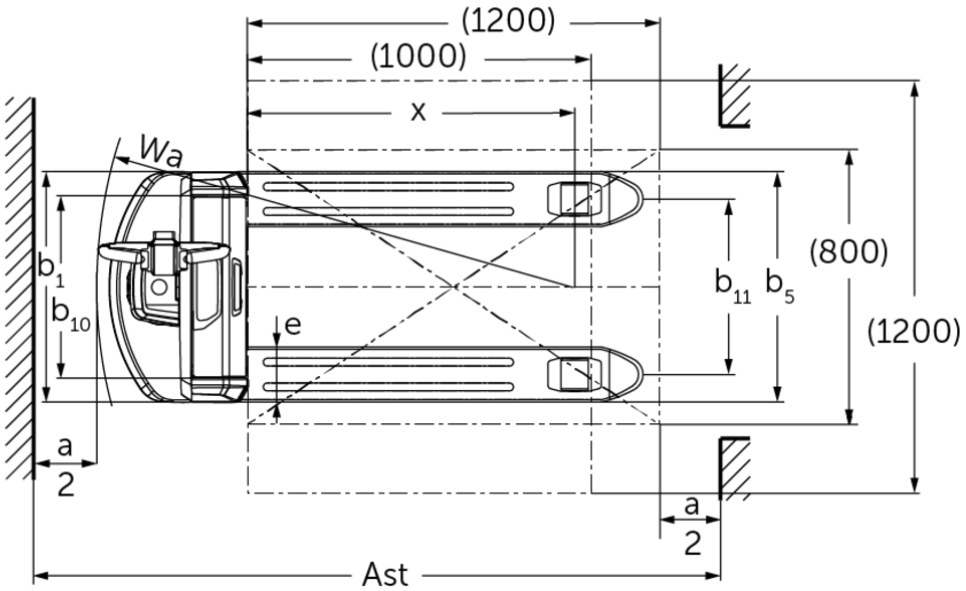
(1200)
(1000)
x
Wa
b1
b10
e
b11
b5
(800)
(1200)
a
2
a
2
Ast

VDI table

Characteristic	1.1	Manufacturer (abbreviated description)			Jungheinrich								
	1.2	Manufacturer's type designation			AME 20 (530x800, V-BV)	AME 20 (530x1000, V-BV)	AME 20 (530x1150, V-BV)	AME 20 (530x1150, V-GV)	AME 20 (530x1210, V-BV)	AME 20 (670x1000, V-BV)	AME 20 (670x1150, V-BV)	AME 20 (670x1150, V-GV)
	1.3	Drive type			electric								
	1.4	Operation			Pedestrian								
	1.5	Load capacity/ load	Q	kg	2000								
	1.6	Load centre distance	c	mm	600								
	1.8	Load distance, centre of drive axle to fork	x	mm	602	802	952		1012	802	952		
	1.9	Wheelbase	y	mm	843	1043	1193		1253	1043	1193		
Weights	2.1.1	Service weight (incl. battery)		kg	145	153	158		160	161	166		
	2.2	Axle load laden front/rear		kg	725 / 1420	728 / 1425	729 / 1429		730 / 1430	734 / 1427	736 / 1430		
	2.3	Axle load unladen front/rear		kg	119 / 26	125 / 28	128 / 30		130 / 30	133 / 28	136 / 30		
Wheels/chassis	3.1	Tyres			Polyurethane (PU)								
	3.2	Tyre size, front			Ø210 x 70								
	3.3	Tyre size, rear			Ø80 x 70 (Ø80 x 93)								
	3.4	Additional wheels			Ø62,5 x 45								
	3.5	Wheels, number front/back (x=driven)			1x +2 / 4 (1x +2 / 2)								
	3.6	Tread width, front	b10	mm	390					530			
	3.7	Tread width, rear	b11	mm	370					510			
Basic dimensions	4.2.1	Total height	h15	mm	673								
	4.4	Lift (h3)	h3	mm	115								
	4.9	Height of tiller handle in drive position min./max.	h14	mm	700 / 1190								
	4.15	Height, lowered	h13	mm	80								
	4.19	Total length	l1	mm	1200	1400	1550		1610	1400	1550		
	4.20	Length including fork shank	l2	mm	400								
	4.21.1	total width	b1	mm	530					670			
	4.22	Fork dimensions	s/ e/l	mm	53 x 160 x 800	53 x 160 x 1000	53 x 160 x 1150		53 x 160 x 1210	53 x 160 x 1000	53 x 160 x 1150		
	4.25	Width across forks	b5	mm	530					670			
	4.32	Ground clearance centre of wheelbase	m2	mm	27								
	4.34.2	Aisle width (pallet 800x1200 length)	Ast	mm	1958	2003	2060		2090	2003	2060		
	4.35	Turning radius	Wa	mm	1039	1239	1389		1449	1239	1389		1449

Performance data	5.1	Travel speed laden/unladen	km/h	5 / 5.5
	5.2	Lift speed laden/ unladen	m/s	0.03 / 0.04
	5.3	Lowering speed laden/unladen	m/s	0.06 / 0.05
	5.8	Max. gradeability laden/unladen	%	7 / 20
	5.10	Service brake		electromagnetic
Electric motor/electronics	6.1	Drive motor, performance S2 60 min	kW	1
	6.2	Lift motor, performance with S3	kW	0.8
	6.4	Battery voltage/ nominal capacity	V / Ah	48 / 25
	6.5	Battery weight	kg	10.5
	6.6	Energy consumption according to VDI cycle	kWh/h	0.16
Other	8.1	Type of drive control		Impulse/DC
	10.7	Sound pressure level according to EN12053	dB (A)	70

- This data sheet according to VDI guideline 2198 only states the technical values of the standard truck. Different tyres, other masts, additional equipment etc. may result in different values.

- VDI no. 4.2.1: overall height h15 = height of the truck without tiller.