

Electric Ride-On/Pedestrian Pallet Truck

ERE MA 120

Lift height: 120 mm / Load capacity: 2000 kg

LI-ION technology

ERE MA 120

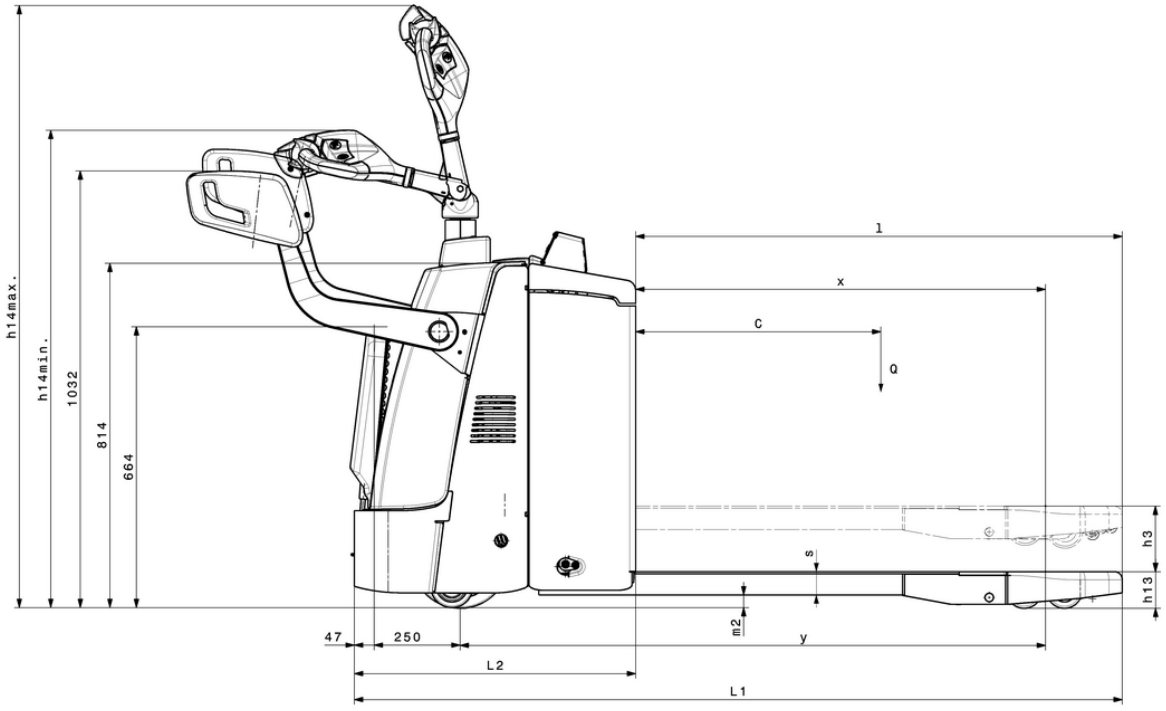
h14max.
h14min.
1032
814
664
l
x
c
Q
h3
h13
s
m2
47
250
y
L2
L1

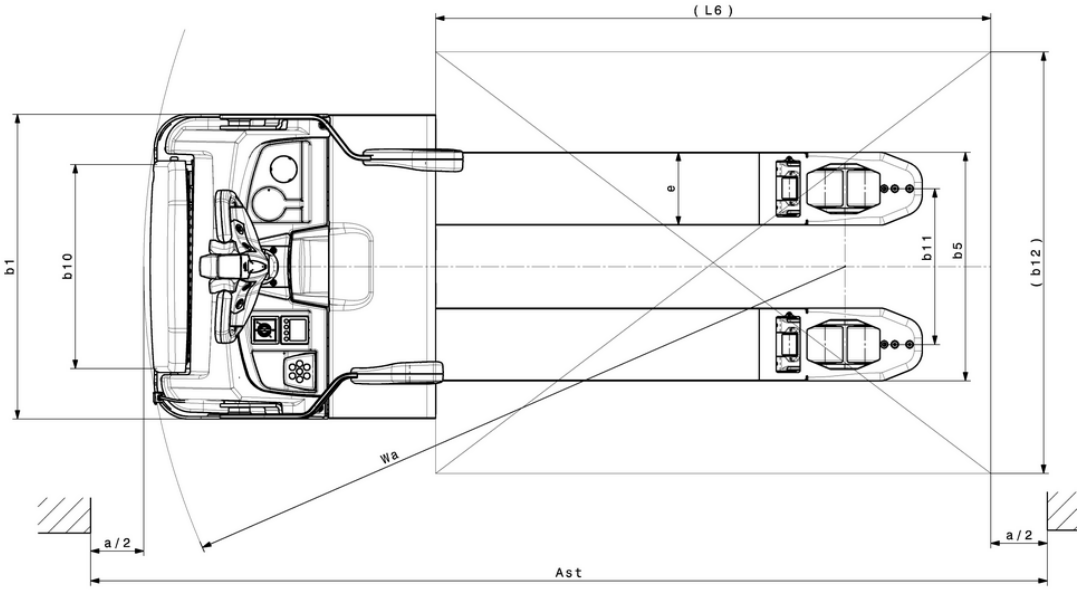
(L6)
b1
b10
e
b11
b5
(b12)
Wa
a / 2
a / 2
Ast

VDI table

Characteristic	1.1	Manufacturer (abbreviated description)			Jungheinrich
	1.2	Manufacturer's type designation			ERE MA
	1.3	Drive type			electric
	1.4	Operation			Stand-on/pedestrian
	1.5	Load capacity/load	Q	kg	2000
	1.6	Load centre distance	c	mm	600
	1.8	Load distance, centre of drive axle to fork	x	mm	911
	1.9	Wheelbase	y	mm	1327
Weights	2.1.1	Service weight (incl. battery)		kg	575
	2.2	Axle load laden front/rear		kg	905 / 1670
	2.3	Axle load unladen front/rear		kg	440 / 135
Wheels/chassis	3.1	Tyres			Polyurethane (PU)
	3.2	Tyre size, front			Ø 230 x 70
	3.3	Tyre size, rear			Ø 85 x 110 / Ø 85 x 85
	3.4	Additional wheels			Ø 100x40
	3.5	Wheels, number front/back (x=driven)			1x+2/2 or 4
	3.6	Tread width, front	b10	mm	508
	3.7	Tread width, rear	b11	mm	368
Basic dimensions	4.4	Lift (h3)	h3	mm	122
	4.9	Height of tiller handle in drive position min./max.	h14	mm	1180 / 1430
	4.15	Height, lowered	h13	mm	85
	4.19	Total length	l1	mm	1815
	4.20	Length including fork shank	l2	mm	665
	4.21.1	Total width	b1	mm	720
	4.21.2	Total width	b2	mm	720
	4.22	Fork dimensions	s/e/l	mm	55 x 172 x 1150
	4.25	Width across forks	b5	mm	540
	4.32	Ground clearance centre of wheelbase	m2	mm	30
	4.34.1	Aisle width (pallet 1000×1200 sideways)	Ast	mm	2467
	4.34.2	Aisle width (pallet 800x1200 length)	Ast	mm	2353
	4.35	Turning radius	Wa	mm	1660
Performance data	5.1	Travel speed laden/unladen		km/h	6.5 / 6.5
	5.2	Lift speed laden/unladen		m/s	0.05 / 0.07
	5.3	Lowering speed laden/unladen		m/s	0.06 / 0.05
	5.7	Gradeability laden/unladen		%	8 / 16
	5.10	Service brake			generative

Electric motor/electronics	6.1	Drive motor, performance S2 60 min	kW	1
	6.2	Lift motor, performance with S3	kW	2.2
	6.3	Battery according to DIN 43531/35/36		DIN 43531 B
	6.4	Battery voltage/nominal capacity	V / Ah	24 / 180
	6.5	Battery weight	kg	180
	6.6.1	Energy consumption according to EN cycle	kWh/h	0.56
	6.6.2	CO2 equivalent according to EN ISO 23308	kg/h	0.3
	6.7	Throughput	t/h	101
Other	8.1	Type of drive control		AC
	10.7	Sound pressure level according to EN12053	dB (A)	65

- This data sheet according to VDI guideline 2198 only states the technical values of the standard truck. Different tyres, other masts, additional equipment etc. may result in different values.

- VDI no. 1.8: 1.9: 4.34.1: 4.34.2: 4.35: Load section lowered: +53mm
- VDI no. 4.34.1: Ast for intrusive stacking (empty pallet place): -368mm
- VDI no. 4.34.2: Ast for intrusive stacking (empty pallet place): -204mm
- VDI no. 4.19: 4.20: 4.34.1: 4.34.2: 4.35: with platform folded down +436mm