

Electric Pedestrian Stacker

AMC 12z

Lift height: 2814-3514 mm / Load capacity: 1200 kg

LI-ION technology

JUNGHEINRICH

AMC 12z

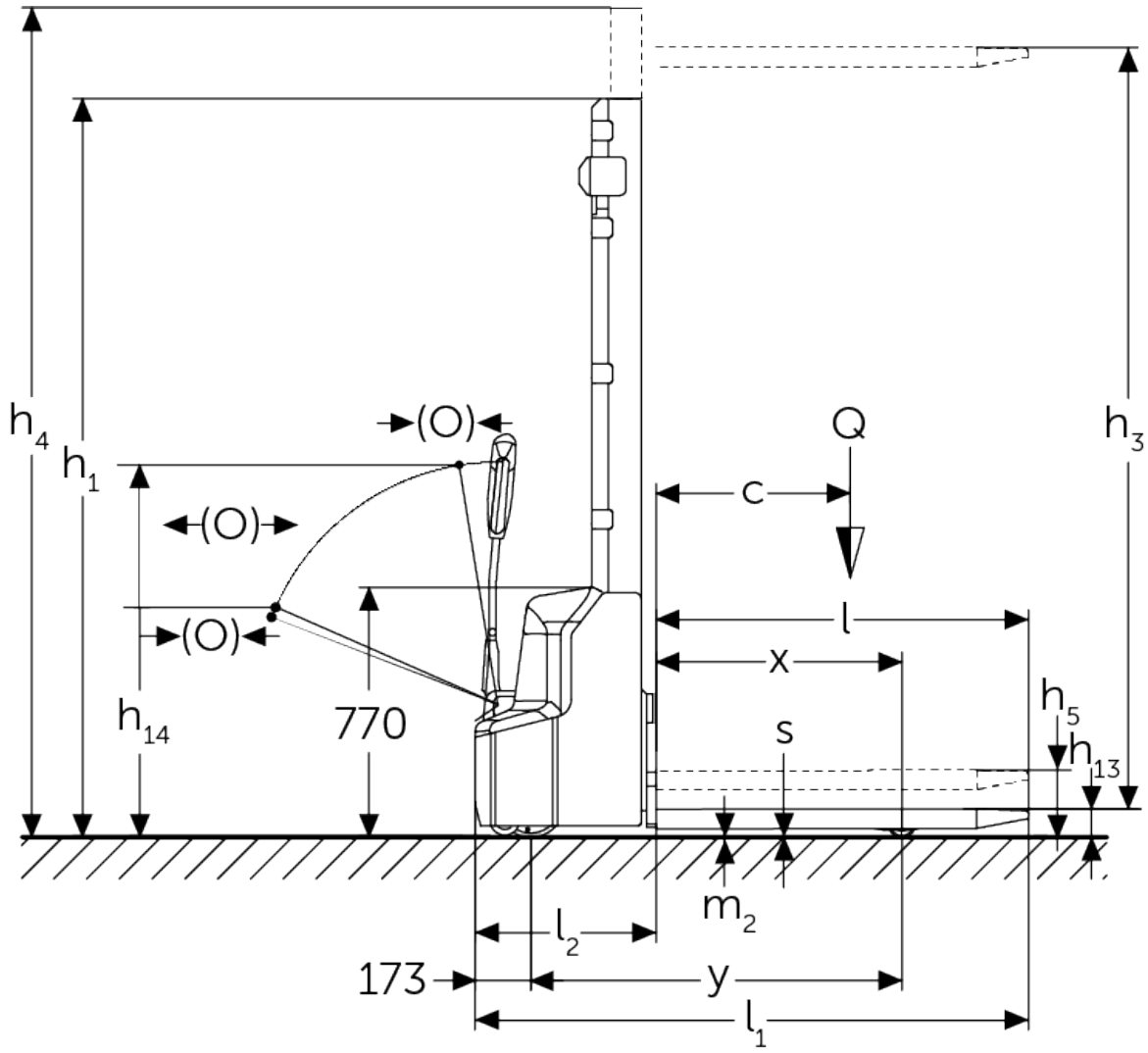
h4
h1
(O)
(O)
(O)
Q
h3
c
l
x
h5
h13
h14
770
s
m2
l2
173
y
l1

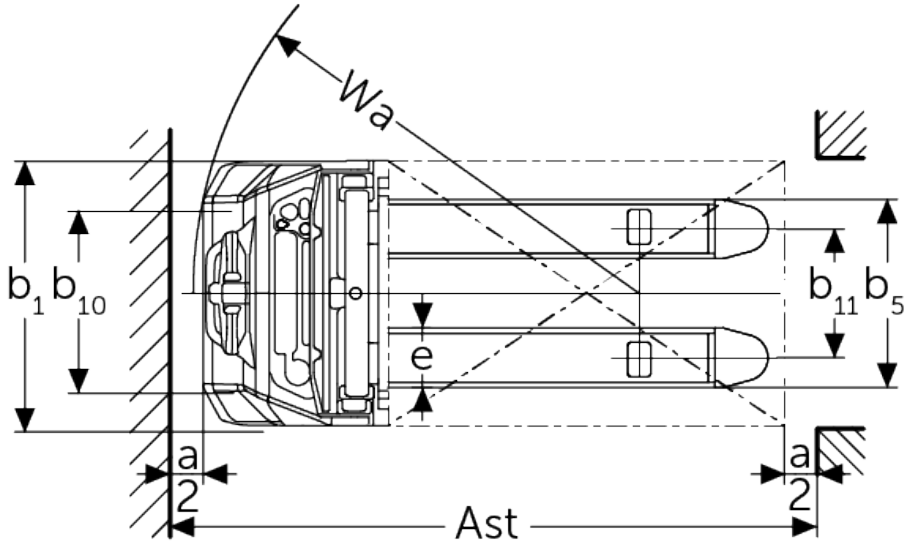
Wa
b1
b10
b11
b5
e
a
2
a
2
Ast

VDI table

Characteristic	1.1	Manufacturer (abbreviated description)			Other (OEM)		
	1.2	Manufacturer's type designation			AMC 12z (280 ZT)	AMC 12z (350 ZT)	
	1.3	Drive type			electric		
	1.4	Operation			Pedestrian		
	1.5	Load capacity/load	Q	kg	1200		
	1.5.1	Rated capacity/load with mast lift	Q	kg	1200		
	1.5.2	Rated capacity/load with support arm lift	Q	kg	1200		
	1.6	Load centre distance	c	mm	600		
	1.8	Load distance, centre of drive axle to fork	x	mm	752		
	1.9	Wheelbase	y	mm	1181		
Weights	2.1.1	Service weight (incl. battery)		kg	640	670	
	2.2	Axle load laden front/rear		kg	670 / 1200		
	2.3	Axle load unladen front/rear		kg	485 / 185		
Wheels/chassis	3.4	Additional wheels			100x50		
	3.6	Tread width, front	b10	mm	550		
Basic dimensions	4.2	Retracted mast height (h1)	h1	mm	1970	2320	
	4.4	Lift (h3)	h3	mm	2814	3514	
	4.5	Extended mast height (h4)	h4	mm	3377	4077	
	4.6	Initial lift	h5	mm	120		
	4.9	Height of tiller handle in drive position min./max.	h14	mm	710 / 1150		
	4.15	Height, lowered	h13	mm	86		
	4.19	Total length	l1	mm	1752		
	4.20	Length including fork shank	l2	mm	602		
	4.21.1	Total width	b1	mm	800		
	4.22	Fork dimensions	s/e/l	mm	60 x 180 x 1150		
	4.25	Width across forks	b5	mm	570		
	4.32	Ground clearance centre of wheelbase	m2	mm	24		
	4.34.1	Aisle width (pallet 1000×1200 sideways)	Ast	mm	2234		
	4.34.2	Aisle width (pallet 800x1200 length)	Ast	mm	2185		
	4.35	Turning radius	Wa	mm	1384		
Performance data	5.1	Travel speed laden/unladen		km/h	4.2 / 4.5		
	5.2	Lift speed laden/unladen		m/s	0.11 / 0.16		
	5.3	Lowering speed laden/unladen		m/s	0.13 / 0.11		
	5.7	Gradeability laden/unladen		%	5 / 10		
	5.10	Service brake			electromagnetic		

Electric motor/electronics	6.1	Drive motor, performance S2 60 min	kW	0.65
	6.2	Lift motor, performance with S3	kW	2.2
	6.3	Battery according to DIN 43531/35/36		no
	6.4	Battery voltage/nominal capacity	V / Ah	24 / 60
	6.5	Battery weight	kg	17
	6.6	Energy consumption according to VDI cycle	kWh/h	0.66
Other	8.1	Type of drive control		Impulse/DC
	10.7	Sound pressure level according to EN12053	dB (A)	70

- This data sheet according to VDI guideline 2198 only states the technical values of the standard truck. Different tyres, other masts, additional equipment etc. may result in different values.

The German production facilities in Norderstedt, Moosburg and Landsberg are certified as well as our Genuine Parts Center in Kaltenkirchen.

ISO 9001
ISO 14001

Jungheinrich fork lift trucks meet European safety requirements.

CE

JUNGHEINRICH