

Electric pedestrian stacker

AMC 12

Lift height: 2514-3514 mm / Load capacity: 1200 kg

LI-ION technology

JUNGHEINRICH

AMC 12

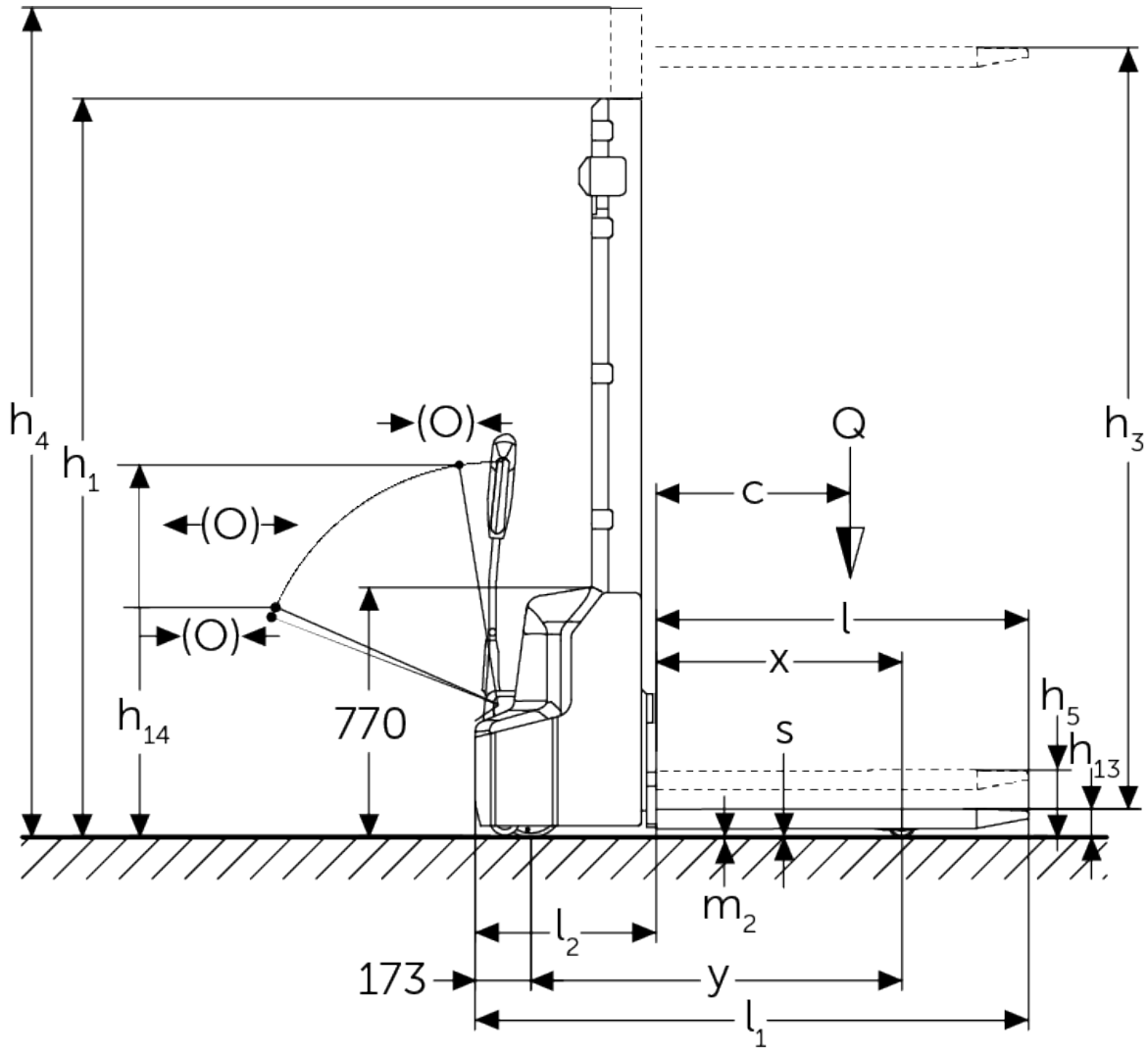
h4
h1
(O)
(O)
(O)
Q
h3
c
l
x
h5
h13
h14
770
s
m2
l2
173
y
l1

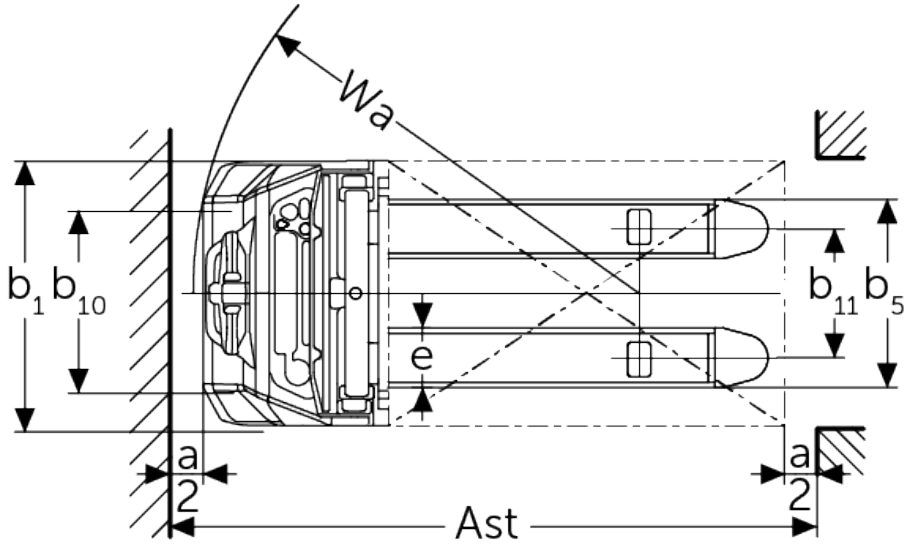
Wa
b1
b10
b11
b5
e
a
2
a
2
Ast

VDI table

Characteristic	1.1	Manufacturer (abbreviated description)			Other (OEM)			
	1.2	Manufacturer's type designation			AMC 12 (250 ZT)	AMC 12 (280 ZT)	AMC 12 (310 ZT)	AMC 12 (350 ZT)
	1.3	Drive type			electric			
	1.4	Operation			Pedestrian			
	1.5	Load capacity/load	Q	kg	1200			
	1.6	Load centre distance	c	mm	600			
	1.8	Load distance, centre of drive axle to fork	x	mm	760			
	1.9	Wheelbase	y	mm	1097			
Weights	2.1.1	Service weight (incl. battery)		kg	555	565	575	595
	2.2	Axle load laden front/rear		kg	560 / 1225			
	2.3	Axle load unladen front/rear		kg	440 / 145			
Wheels/chassis	3.4	Additional wheels			100x50			
	3.6	Tread width, front	b10	mm	550			
Basic dimensions	4.2	Retracted mast height (h1)	h1	mm	1780	1930	2080	2280
	4.4	Lift (h3)	h3	mm	2514	2814	3114	3514
	4.5	Extended mast height (h4)	h4	mm	3037	3337	3637	4037
	4.9	Height of tiller handle in drive position min./max.	h14	mm	710 / 1150			
	4.15	Height, lowered	h13	mm	86			
	4.19	Total length	l1	mm	1710			
	4.20	Length including fork shank	l2	mm	560			
	4.21.1	total width	b1	mm	800			
	4.22	Fork dimensions	s/e/l	mm	60 x 180 x 1150			
	4.25	Width across forks	b5	mm	570			
	4.32	Ground clearance centre of wheelbase	m2	mm	24			
	4.34.1	Aisle width (pallet 1000×1200 sideways)	Ast	mm	2197			
	4.34.2	Aisle width (pallet 800x1200 length)	Ast	mm	2145			
	4.35	Turning radius	Wa	mm	1350			
Performance data	5.1	Travel speed laden/unladen		km/h	4.2 / 4.5			
	5.2	Lift speed laden/unladen		m/s	0.11 / 0.16			
	5.3	Lowering speed laden/unladen		m/s	0.13 / 0.11			
	5.7	Gradeability laden/unladen		%	5 / 10			
	5.10	Service brake			electromagnetic			

Electric motor/electronics	6.1	Drive motor, performance S2 60 min	kW	0.65
	6.2	Lift motor, performance with S3	kW	2.2
	6.3	Battery according to DIN 43531/35/36		no
	6.4	Battery voltage/nominal capacity	V / Ah	24 / 60
	6.5	Battery weight	kg	17
	6.6	Energy consumption according to VDI cycle	kWh/h	0.8
Other	8.1	Type of drive control		Impulse/DC
	10.7	Sound pressure level according to EN12053	dB (A)	70

- This data sheet according to VDI guideline 2198 only states the technical values of the standard truck. Different tyres, other masts, additional equipment etc. may result in different values.

The German production facilities in Norderstedt, Moosburg and Landsberg are certified as well as our Genuine Parts Center in Kaltenkirchen.

ISO 9001
ISO 14001

Jungheinrich fork lift trucks meet European safety requirements.

CE

JUNGHEINRICH