

Low level order pickers with ergonomic lift

ECD 320

Lift height: 700-1500 mm / Load capacity: 2000 kg

LI-ION technology

JUNGHEINRICH

ECD 320

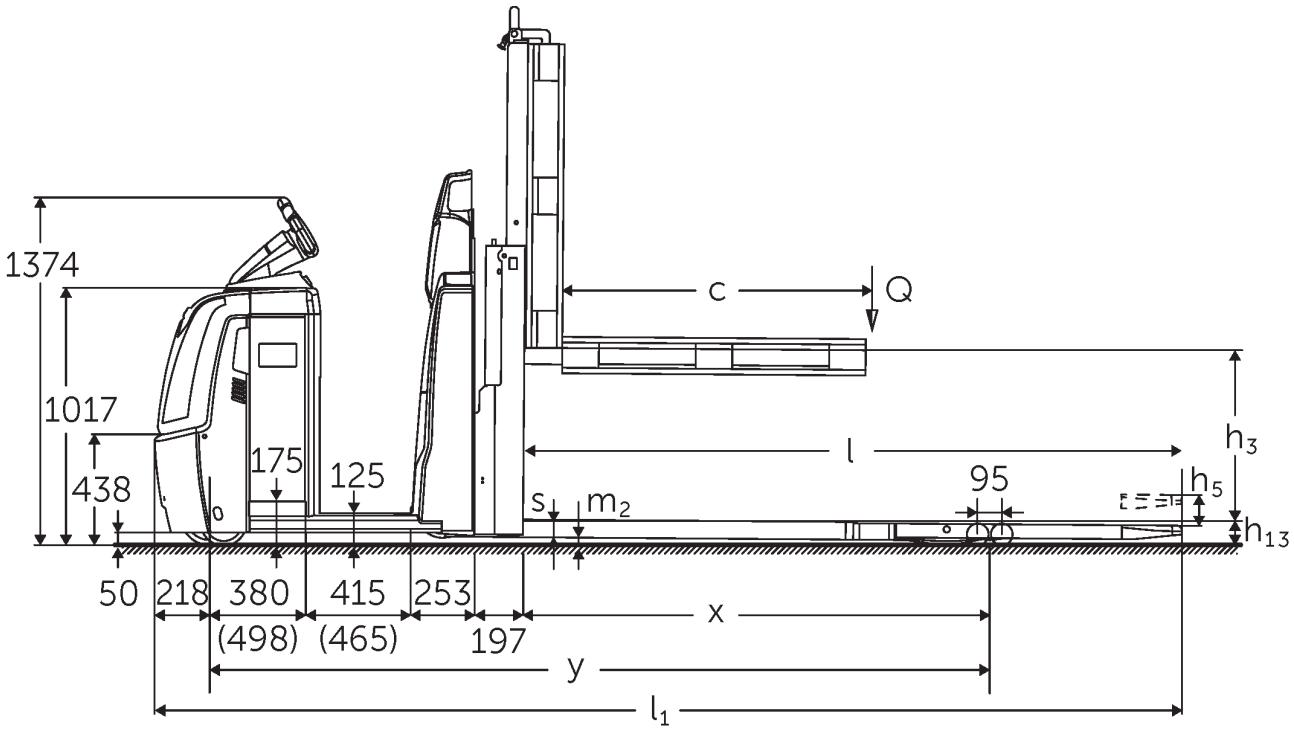

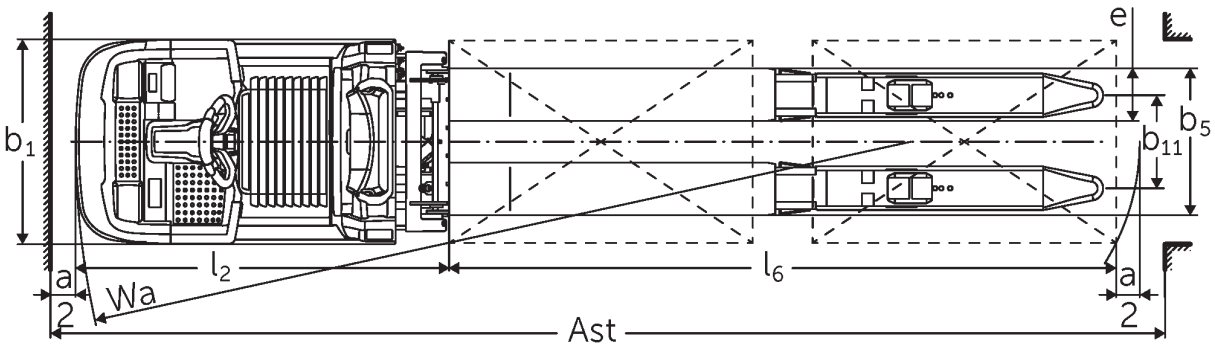

ECD 320 NOC 2016 Techn

VDI table

Characteristic	1.1	Manufacturer (abbreviated description)			Jungheinrich
	1.2	Manufacturer's type designation			ECD 320
	1.3	Drive type			electric
	1.4	Operation			Order pickers
	1.5	Load capacity/load	Q	kg	2000
	1.6	Load centre distance	c	mm	1300
	1.8	Load distance, centre of drive axle to fork	x	mm	1718
	1.9	Wheelbase	y	mm	2981
Weights	2.1.1	Service weight (incl. battery)		kg	1235
	2.2	Axle load laden front/rear		kg	1155 / 2080
	2.3	Axle load unladen front/rear		kg	920 / 315
Wheels/chassis	3.1	Tyres			Polyurethane (PU)
	3.2	Tyre size, front			Ø 230 x 78
	3.3	Tyre size, rear			Ø 85 x 85
	3.4	Additional wheels			Ø 180 x 65
	3.5	Wheels, number front/back (x=driven)			1+1x/4
	3.6	Tread width, front	b10	mm	481
	3.7	Tread width, rear	b11	mm	368
Basic dimensions	4.4	Lift (h3)	h3	mm	700
	4.9	Height of tiller handle in drive position min./max.	h14	mm	1374 / 1418
	4.15	Height, lowered	h13	mm	90
	4.19	Total length	l1	mm	4081
	4.20	Length including fork shank	l2	mm	1480
	4.21.1	total width	b1	mm	810
	4.22	Fork dimensions	s/e/l	mm	65 x 172 x 2600
	4.25	Width across forks	b5	mm	540
	4.32	Ground clearance centre of wheelbase	m2	mm	25
	4.34.2	Aisle width (pallet 800x1200 length)	Ast	mm	4281
	4.35	Turning radius	Wa	mm	3199
Performance data	5.1	Travel speed laden/unladen (Efficiency | drivePLUS)		km/h	9.2 / 12.5 | 9.2 / 14
	5.2	Lift speed laden/unladen		m/s	0.07 / 0.11
	5.3	Lowering speed laden/unladen		m/s	0.07 / 0.06
	5.8	Max. gradeability laden/unladen (Efficiency | drivePLUS)		%	6 / 15 | 6 / 15
	5.10	Service brake			generative

Electric motor/electronics	6.1	Drive motor, performance S2 60 min (Efficiency | drivePLUS)	kW	2.8 | 3.2
	6.2	Lift motor, performance with S3	kW	1.5
	6.4	Battery voltage/nominal capacity	V / Ah	24 / 465
	6.5	Battery weight	kg	370
	6.6.1	Energy consumption according to EN cycle	kWh/h	0.53
	6.6.2	CO2 equivalent according to EN ISO 23308	kg/h	0.29
	6.7	Throughput	t/h	136
	6.8.1	Energy consumption with max. throughput	kWh/h	1.36
Other	8.1	Type of drive control		AC
	10.5	Steering version		electric
	10.7	Sound pressure level according to EN12053	dB (A)	62

- This data sheet according to VDI guideline 2198 only states the technical values of the standard truck. Different tyres, other masts, additional equipment etc. may result in different values.

Values for L battery compartment; fork length 2,450 mm; lift 700 mm; raised load section.
- VDI no. 1.8: with lowered load section: x + 82 mm.
- VDI no. 1.9: with XL or XL (ERE) battery compartment: y + 118 mm; with extended stand-on platform: y + 50 mm; with lowered load section: y + 82 mm.
- VDI no. 4.19: with XL or XL (ERE) battery compartment: l1 + 118 mm; with extended stand-on platform: l1 + 50 mm.
- VDI no. 4.20: with XL or XL (ERE) battery compartment: l2 + 118 mm; with extended stand-on platform: l2 + 50 mm.
- VDI no. 4.34.2: with XL or XL (ERE) battery compartment: aisle width + 118 mm; with extended stand-on platform: aisle width + 50 mm; diagonal as per VDI: aisle width + 94 mm.
- VDI no. 4.35: with XL or XL (ERE) battery compartment: Wa + 118 mm; with extended stand-on platform: Wa + 50 mm; with lowered load section: Wa + 82 mm.
- VDI no. 6.2: with S3 10%.
- VDI no. 6.4: with XL battery compartment: 24 V / 620 Ah.
- VDI no. 6.5: with XL battery compartment: 460 kg.

The German production facilities in Norderstedt, Moosburg and Landsberg are certified as well as our Genuine Parts Center in Kaltenkirchen.

ISO 9001
ISO 14001

Jungheinrich fork lift trucks meet European safety requirements.

CE

JUNGHEINRICH