

Electric reach truck

ETV MB 214/216

Lift height: 5000-10700 mm / Load capacity: 1400-1600 kg

LI-ION technology

ETV MB 214/216

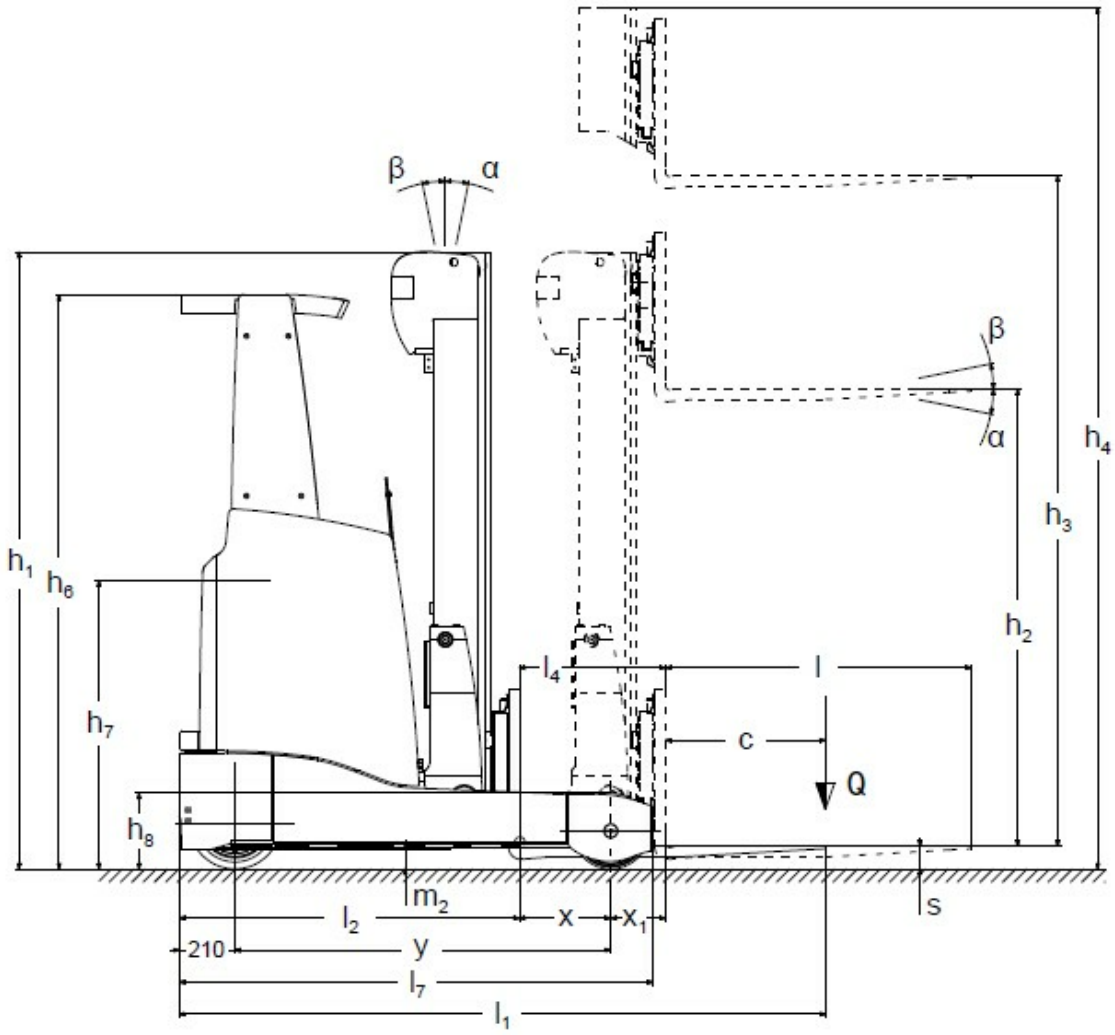

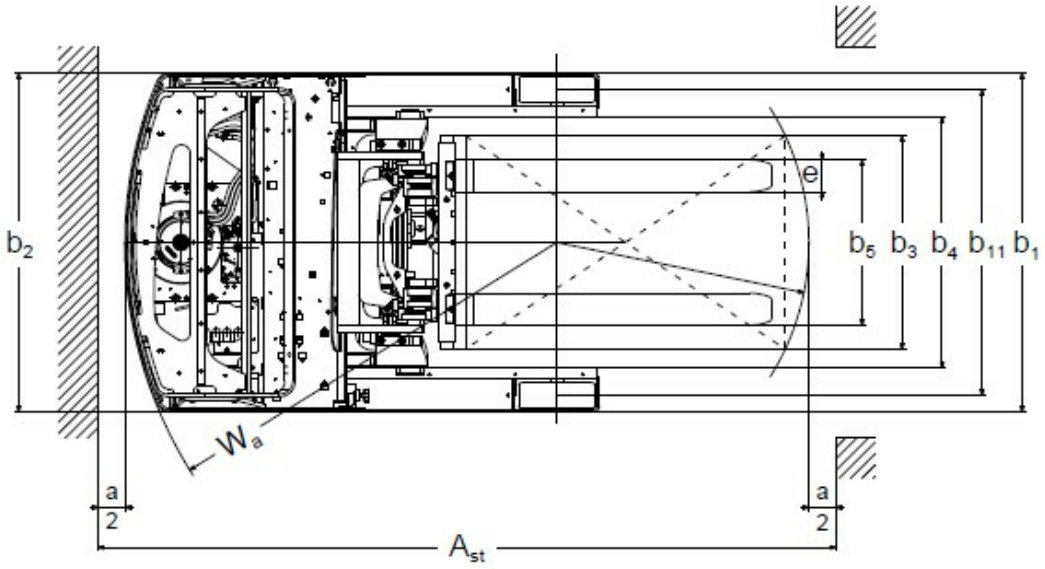

ETV MB 214/216

ETV MB 214, ETV MB 216	Lift (h3)	Retracted mast height (h1)	Free lift (h2)	Extended mast height (h4)	Forward/ backward tilt of mast	Forward/ backward tilt of fork carriage
Fork tilt / Triplex mast DZ / cold-formed	5000 mm	2200 mm	1548 mm	5652 mm		2 / 5 °
	5300 mm	2300 mm	1648 mm	5952 mm		2 / 5 °
	5900 mm	2500 mm	1848 mm	6552 mm		2 / 5 °
	6200 mm	2600 mm	1948 mm	6852 mm		2 / 5 °
	6500 mm	2700 mm	2048 mm	7152 mm		2 / 5 °
	6800 mm	2800 mm	2148 mm	7452 mm		2 / 5 °
	7100 mm	2900 mm	2248 mm	7752 mm		2 / 5 °
	7700 mm	3100 mm	2448 mm	8352 mm		2 / 5 °
	8420 mm	3340 mm	2688 mm	9072 mm		2 / 5 °
	9020 mm	3540 mm	2888 mm	9672 mm		2 / 5 °
Mast tilt / Triplex mast DZ / cold-formed	8420 mm	3340 mm	2688 mm	9072 mm	0.5 / 1 °	
	9020 mm	3540 mm	2888 mm	9672 mm	0.5 / 1 °	
Mast tilt / Triplex mast DZ / hot-rolled	5000 mm	2200 mm	1548 mm	5652 mm	1 / 5 °	
	5300 mm	2300 mm	1648 mm	5952 mm	1 / 5 °	
	5900 mm	2500 mm	1848 mm	6552 mm	1 / 3 °	
	6200 mm	2600 mm	1948 mm	6852 mm	1 / 3 °	
	6500 mm	2700 mm	2048 mm	7152 mm	0.5 / 2 °	
	6800 mm	2800 mm	2148 mm	7452 mm	0.5 / 2 °	
	7100 mm	2900 mm	2248 mm	7752 mm	0.5 / 2 °	
	7700 mm	3100 mm	2448 mm	8352 mm	0.5 / 1 °	
ETV MB 216	**Lift (h3)**	**Retracted mast height (h1)**	**Free lift (h2)**	**Extended mast height (h4)**	**Forward/ backward tilt of mast**	**Forward/ backward tilt of fork carriage**
Fork tilt / Triplex mast DZ / cold-formed	9110 mm	3670 mm	2930 mm	9850 mm		2 / 5 °
	9620 mm	3840 mm	3100 mm	10360 mm		2 / 5 °
	9950 mm	3950 mm	3210 mm	10690 mm		2 / 5 °
	10220 mm	4040 mm	3300 mm	10960 mm		2 / 5 °
	10520 mm	4140 mm	3400 mm	11260 mm		2 / 5 °
	10700 mm	4200 mm	3460 mm	11440 mm		2 / 5 °

VDI table

Characteristic	1.1	Manufacturer (abbreviated description)			Jungheinrich	
	1.2	Manufacturer's type designation			ETV MB 214	ETV MB 216
	1.3	Drive type			electric	
	1.4	Operation			Sideways-seated	
	1.5	Load capacity/load	Q	kg	1400	1600
	1.6	Load centre distance	c	mm	600	
	1.8	Load distance, centre of drive axle to fork	x	mm	345	395
	1.8.1	Load distance, centre of drive axle to fork, mast extended		mm	205	
	1.9	Wheelbase	y	mm	1410	1460
Weights	2.1.1	Service weight (incl. battery)		kg	3004	3070
	2.3	Axle load unladen front/rear		kg	1814 / 1190	1885 / 1185
	2.4	Axle load fork forward laden front/rear		kg	567 / 3837	534 / 4136
	2.5	Axle load fork back laden front/rear		kg	1551 / 2853	1650 / 3020
Wheels/chassis	3.1	Tyres			Polyurethane (PU)	
	3.2	Tyre size, front			Ø 343 x 114	
	3.3	Tyre size, rear			Ø 285 x 100	
	3.5	Wheels, number front/back (x=driven)			1x / 2	
	3.7	Tread width, rear	b11	mm	1136	
Basic dimensions	4.1	Forward/backward tilt of mast	a/ß	°	1 / 5	
	4.2	Retracted mast height (h1)	h1	mm	2300	
	4.3	Free lift (h2)	h2	mm	1800	
	4.4	Lift (h3)	h3	mm	5300	
	4.5	Extended mast height (h4)	h4	mm	5952	
	4.7	Height of overhead guard (cab)	h6	mm	2154	
	4.8	Seat height/stand height	h7	mm	1068	
	4.10	Height of support arms	h8	mm	285	
	4.19	Total length	l1	mm	2425	
	4.20	Length including fork shank	l2	mm	1275	
	4.21.1	total width	b1	mm	1270	
	4.21.2	total width	b2	mm	1270	
	4.22	Fork dimensions	s/e/l	mm	40 x 120 x 1150	
	4.23	Fork carriage connection class			2B	
	4.24	Fork carriage width	b3	mm	800	
	4.25	Width across forks	b5	mm	335	
	4.26	Width between support arms/loading areas	b4	mm	940	
	4.28	Reach distance		mm	544	594
	4.32	Ground clearance centre of wheelbase	m2	mm	80	
	4.34.1	Aisle width (pallet 1000×1200 sideways)	Ast	mm	2708	2722
	4.34.2	Aisle width (pallet 800x1200 length)	Ast	mm	2764	2769
	4.35	Turning radius	Wa	mm	1620	1670
	4.37	Length over the support arms	L7	mm	1780	1830

Performance data	5.1	Travel speed laden/unladen (Efficiency | drivePLUS)	km/h	11 / 11 | 14 / 14	
	5.2	Lift speed laden/unladen (Efficiency | liftPLUS)	m/s	0.36 / 0.7 | 0.51 / 0.7	0.34 / 0.7 | 0.48 / 0.7
	5.3	Lowering speed laden/unladen (Efficiency | liftPLUS)	m/s	0.55 / 0.5 | 0.55 / 0.5	
	5.4	Reach speed laden/unladen (Efficiency | liftPLUS)	m/s	0.2 / 0.2 | 0.2 / 0.2	
	5.7	Gradeability laden/unladen (Efficiency | drivePLUS)	%	9 / 13 | 9 / 13	8 / 12 | 8 / 12
	5.8	Max. gradeability laden/unladen (Efficiency | drivePLUS)	%	10 / 15 | 10 / 15	
	5.9	Acceleration time laden/unladen (Efficiency | drivePLUS)	s	5.3 / 5 | 4.5 / 4.2	5.3 / 5 | 4.7 / 4.3
	5.10	Service brake		electric	
Electric motor/electronics	6.1	Drive motor, performance S2 60 min (Efficiency | drivePLUS)	kW	6 | 8.5	
	6.2	Lift motor, performance with S3 (Efficiency | liftPLUS)	kW	13.3 | 15.5	
	6.3	Battery according to DIN 43531/35/36		DIN 43531 C	
	6.4	Battery voltage/nominal capacity	V / Ah	48 / 465	
	6.5	Battery weight	kg	750	
	6.6.1	Energy consumption according to EN cycle (Efficiency | PLUS)	kWh/h	2.41 | 2.89	2.72 | 3
	6.6.2	CO2 equivalent according to EN ISO 23308 (Efficiency | PLUS)	kg/h	1.3 | 1.6	1.47 | 1.6
	6.7	Throughput (Efficiency | PLUS)	t/h	59 | 61	68 | 69
	6.8.1	Energy consumption with max. throughput (Efficiency | PLUS)	kWh/h	2.66 | 3.47	2.77 | 3.83
Other	8.1	Type of drive control		Mosfet/AC	
	10.1	Operating pressure for attachment	bar	230	
	10.2	Oil flow for attachments	l/min	20	
	10.7	Sound pressure level according to EN12053	dB (A)	70	

- This data sheet according to VDI guideline 2198 only states the technical values of the standard truck. Different tyres, other masts, additional equipment etc. may result in different values.

- VDI no. 1.8: battery size and mast type affect load distance x
- VDI no. 2.1.1: battery size and mast version affect service weight and axle loads
- VDI no. 2.3: battery size and mast version affect service weight and axle loads
- VDI no. 2.4: battery size and mast version affect service weight and axle loads
- VDI no. 2.5: battery size and mast version affect service weight and axle loads
- VDI no. 4.1: the mast version determins the tilt values
- VDI no. 4.10: the height of the support arms is enlarged by 42 mm with a load wheel cover
- VDI no. 4.19: battery size, mast type and fork length affect the overall length l1
- VDI no. 4.19: total length increased by 20mm with floor stripes option
- VDI no. 4.20: battery size and mast type affect the length including fork shank l2
- VDI no. 4.28: battery size and mast type affect the reach distance l4
- VDI no. 4.34.1: battery size and mast type affect the aisle widths
- VDI no. 4.34.1: AST increased by 20mm with floor stripes option
- VDI no. 4.34.2: battery size and mast type affect the aisle widths
- VDI no. 4.34.2: AST increased by 20mm with floor stripes option
- VDI no. 4.7: height of overhead guard increased by 108mm with floor stripes option
- VDI no. 6.6.1: PLUS refers to the drive&liftPLUS performance package
- VDI no. 6.6.2: PLUS refers to the drive&liftPLUS performance package
- VDI no. 6.7: PLUS refers to the drive&liftPLUS performance package
- VDI no. 6.8.1: PLUS refers to the drive&liftPLUS performance package