

Electric reach truck

ETV C16/C20

Lift height: 4250-7400 mm / Load capacity: 1600-2000 kg

LI-ION technology

JUNGHEINRICH

ETV C16/C20

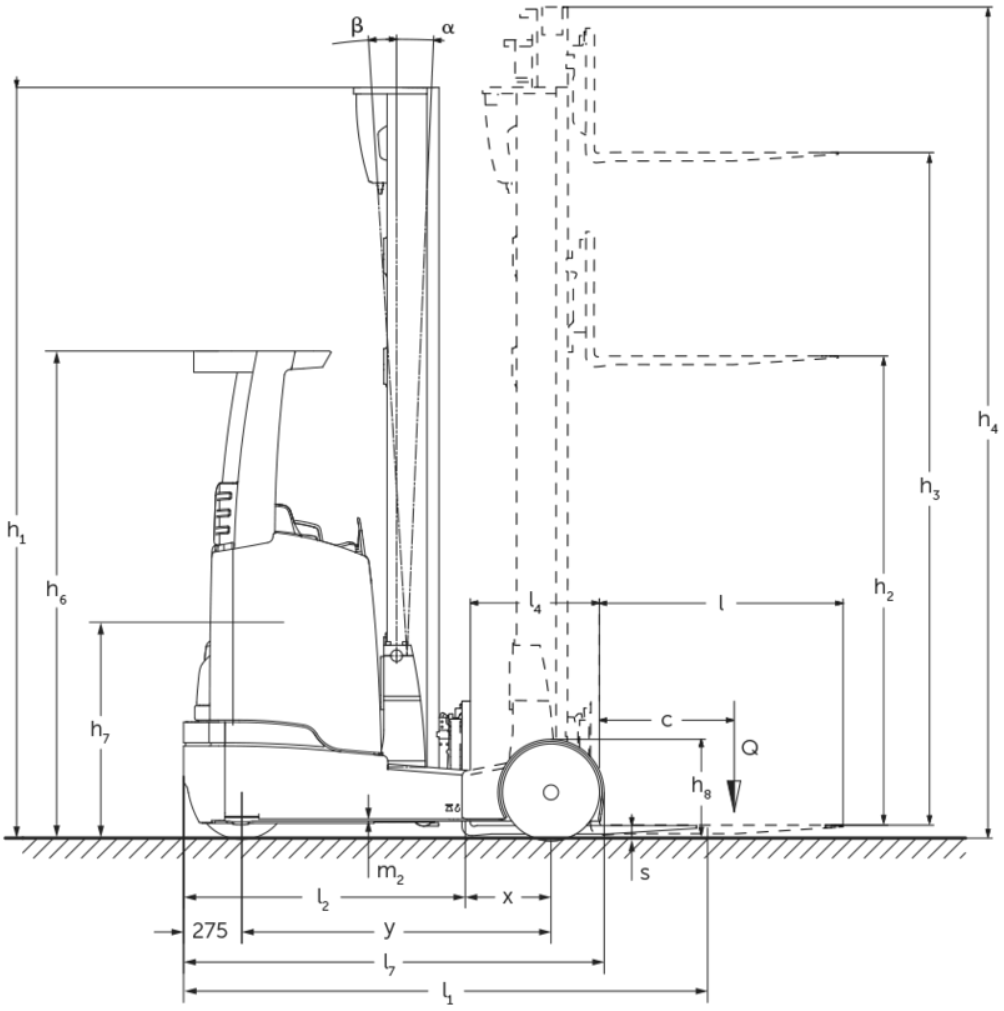
β
α
h1
h6
h7
h4
h3
h2
l4
l
c
Q
h8
m2
l2
x
s
275
y
l7
l1

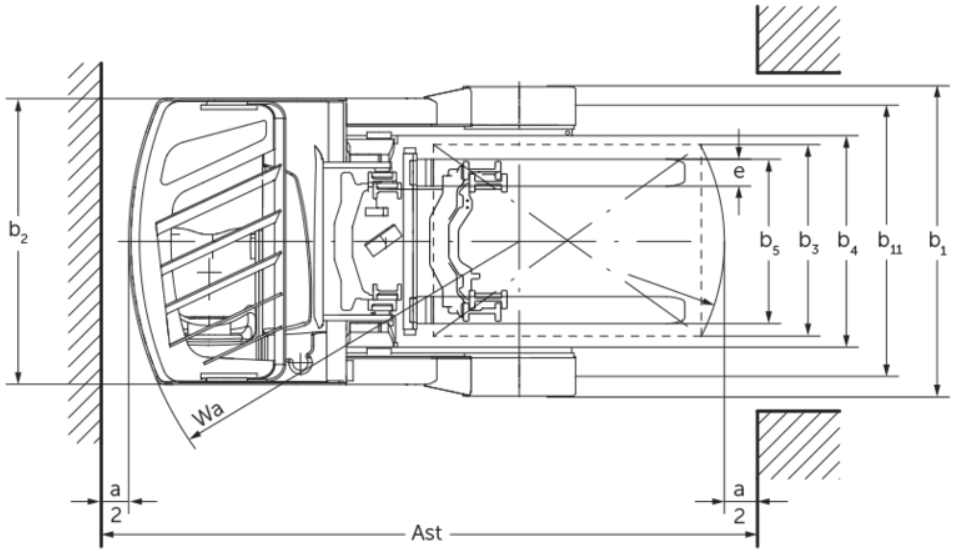
b2
e
b5
b3
b4
b11
b1
Wa
a
2
Ast

ETV C16/C20

ETV C16	Lift (h3)	Retracted mast height (h1)	Free lift (h2)	Extended mast height (h4)	Forward/ backward tilt of mast
Mast tilt / Triplex mast DZ / hot-rolled	4550 mm	2050 mm	1396 mm	5204 mm	2 / 4 °
	5000 mm	2200 mm	1546 mm	5654 mm	2 / 4 °
	5240 mm	2280 mm	1626 mm	5894 mm	2 / 4 °
	5300 mm	2300 mm	1646 mm	5954 mm	2 / 4 °
	5450 mm	2350 mm	1696 mm	6104 mm	2 / 4 °
	5600 mm	2400 mm	1746 mm	6254 mm	2 / 4 °
	5720 mm	2440 mm	1786 mm	6374 mm	2 / 4 °
	5900 mm	2500 mm	1846 mm	6554 mm	2 / 4 °
	6200 mm	2600 mm	1946 mm	6854 mm	2 / 4 °
	6500 mm	2700 mm	2046 mm	7154 mm	2 / 4 °
	6800 mm	2800 mm	2146 mm	7454 mm	2 / 4 °
	7100 mm	2900 mm	2246 mm	7754 mm	2 / 4 °
ETV C20	**Lift (h3)**	**Retracted mast height (h1)**	**Free lift (h2)**	**Extended mast height (h4)**	**Forward/ backward tilt of mast**
Mast tilt / Triplex mast DZ-V / cold-formed	4250 mm	2050 mm	1320 mm	4980 mm	2 / 4 °
	4700 mm	2200 mm	1470 mm	5430 mm	2 / 4 °
	5000 mm	2300 mm	1570 mm	5730 mm	2 / 4 °
	5300 mm	2400 mm	1670 mm	6030 mm	2 / 4 °
	5600 mm	2500 mm	1770 mm	6330 mm	2 / 4 °
	5900 mm	2600 mm	1870 mm	6630 mm	2 / 4 °
	6200 mm	2700 mm	1970 mm	6930 mm	2 / 4 °
	6500 mm	2800 mm	2070 mm	7230 mm	2 / 4 °
	6800 mm	2900 mm	2170 mm	7530 mm	2 / 4 °
	6950 mm	2950 mm	2220 mm	7680 mm	2 / 4 °
	7400 mm	3100 mm	2370 mm	8130 mm	2 / 4 °

VDI table

Characteristic	1.1	Manufacturer (abbreviated description)			Jungheinrich	
	1.2	Manufacturer's type designation			ETV C16	ETV C20
	1.3	Drive type			electric	
	1.4	Operation			Sideways-seated	
	1.5	Load capacity/load	Q	kg	1600	2000
	1.6	Load centre distance	c	mm	600	
	1.8	Load distance, centre of drive axle to fork	x	mm	400	421
	1.8.1	Load distance, centre of drive axle to fork, mast extended		mm	290	
	1.9	Wheelbase	y	mm	1460	1520
Weights	2.1.1	Service weight (incl. battery)		kg	3640	4010
	2.3	Axle load unladen front/rear		kg	2230 / 1410	2410 / 1600
	2.4	Axle load fork forward laden front/rear		kg	670 / 4570	510 / 5500
	2.5	Axle load fork back laden front/rear		kg	1965 / 3275	2146 / 3846
Wheels/chassis	3.1	Tyres			Super-elastic (SE)	
	3.2	Tyre size, front			200 / 50-10	
	3.3	Tyre size, rear			180 / 60-10	
	3.5	Wheels, number front/back (x=driven)			1x / 2	
	3.7	Tread width, rear	b11	mm	1210	1240
Basic dimensions	4.1	Forward/backward tilt of mast	a/ß	°	2 / 4	
	4.2	Retracted mast height (h1)	h1	mm	2300	2400
	4.3	Free lift (h2)	h2	mm	1646	1670
	4.4	Lift (h3)	h3	mm	5300	
	4.5	Extended mast height (h4)	h4	mm	5954	6030
	4.7	Height of overhead guard (cab)	h6	mm	2290	
	4.8	Seat height/stand height	h7	mm	1166	
	4.10	Height of support arms	h8	mm	464	
	4.19	Total length	l1	mm	2484	2524
	4.20	Length including fork shank	l2	mm	1320	1360
	4.21.1	total width	b1	mm	1382	1409
	4.21.2	total width	b2	mm	1270	
	4.22	Fork dimensions	s/e/l	mm	40 x 120 x 1150	50 x 140 x 1150
	4.23	Fork carriage connection class			2B	
	4.24	Fork carriage width	b3	mm	830	
	4.25	Width across forks	b5	mm	335	356
	4.25.1	Width across forks (min./max.)	b5	mm	335 / 705	356 / 750
	4.26	Width between support arms/loading areas	b4	mm	940	
	4.28	Reach distance		mm	690	711
	4.32	Ground clearance centre of wheelbase	m2	mm	80	
	4.34.1	Aisle width (pallet 1000×1200 sideways)	Ast	mm	2784	2829
	4.34.2	Aisle width (pallet 800x1200 length)	Ast	mm	2829	2871
	4.35	Turning radius	Wa	mm	1735	1795
	4.37	Length over the support arms	L7	mm	1986	2046

Performance data	5.1	Travel speed laden/unladen	km/h	11.8 / 12.2		
	5.2	Lift speed laden/unladen	m/s	0.4 / 0.7		0.32 / 0.6
	5.3	Lowering speed laden/unladen	m/s	0.5 / 0.5		
	5.4	Reach speed laden/unladen	m/s	0.2 / 0.2		0.15 / 0.15
	5.7	Gradeability laden/unladen	%	7 / 10		6 / 10
	5.8	Max. gradeability laden/unladen	%	10 / 15		
	5.9	Acceleration time laden/unladen	s	5.1 / 4.8		5.7 / 5
	5.10	Service brake		electric		
Electric motor/electronics	6.1	Drive motor, performance S2 60 min	kW	7.5		
	6.2	Lift motor, performance with S3	kW	13.3		
	6.3	Battery according to DIN 43531/35/36		DIN 43531 C		
	6.4	Battery voltage/nominal capacity	V / Ah	48 / 560		
	6.5	Battery weight	kg	937		
	6.6.1	Energy consumption according to EN cycle	kWh/h	3.59		4.28
	6.6.2	CO2 equivalent according to EN ISO 23308	kg/h	1.94		2.31
	6.7	Throughput	t/h	60.19		65.87
	6.8	Turnover efficiency according to VDI 2198	t/kWh	17.3		17.1
	6.8.1	Energy consumption with max. throughput	kWh/h	3.47		3.85
Other	8.1	Type of drive control		3-phase AC		
	10.1	Operating pressure for attachment	bar	150		
	10.2	Oil flow for attachments	l/min	20		
	10.7	Sound pressure level according to EN12053	dB (A)	70		

- This data sheet according to VDI guideline 2198 only states the technical values of the standard truck. Different tyres, other masts, additional equipment etc. may result in different values.

- VDI no. 1.8: the battery size influences the load distance x
- VDI no. 2.1.1: battery size and mast version affect service weight and axle loads
- VDI no. 2.3: battery size and mast version affect service weight and axle loads
- VDI no. 2.4: battery size and mast version affect service weight and axle loads
- VDI no. 2.5: battery size and mast version affect service weight and axle loads
- VDI no. 4.19: the battery size and the fork length influence the overall length l1
- VDI no. 4.20: the battery size influences the length including fork shank l2
- VDI no. 4.28: the battery size influences the reach distance l4
- VDI no. 4.34.1: the battery size influences the aisle widths
- VDI no. 4.34.2: the battery size influences the aisle widths

The German production facilities in Norderstedt, Moosburg and Landsberg are certified as well as our Genuine Parts Center in Kaltenkirchen.

ISO 9001
ISO 14001

Jungheinrich fork lift trucks meet European safety requirements.

CE

JUNGHEINRICH