

Electric Reach Truck

ETV Q20/Q25

Lift height: 4250-10700 mm / Load capacity: 2000-2500 kg

LI-ION technology

JUNGHEINRICH

ETV Q20/Q25

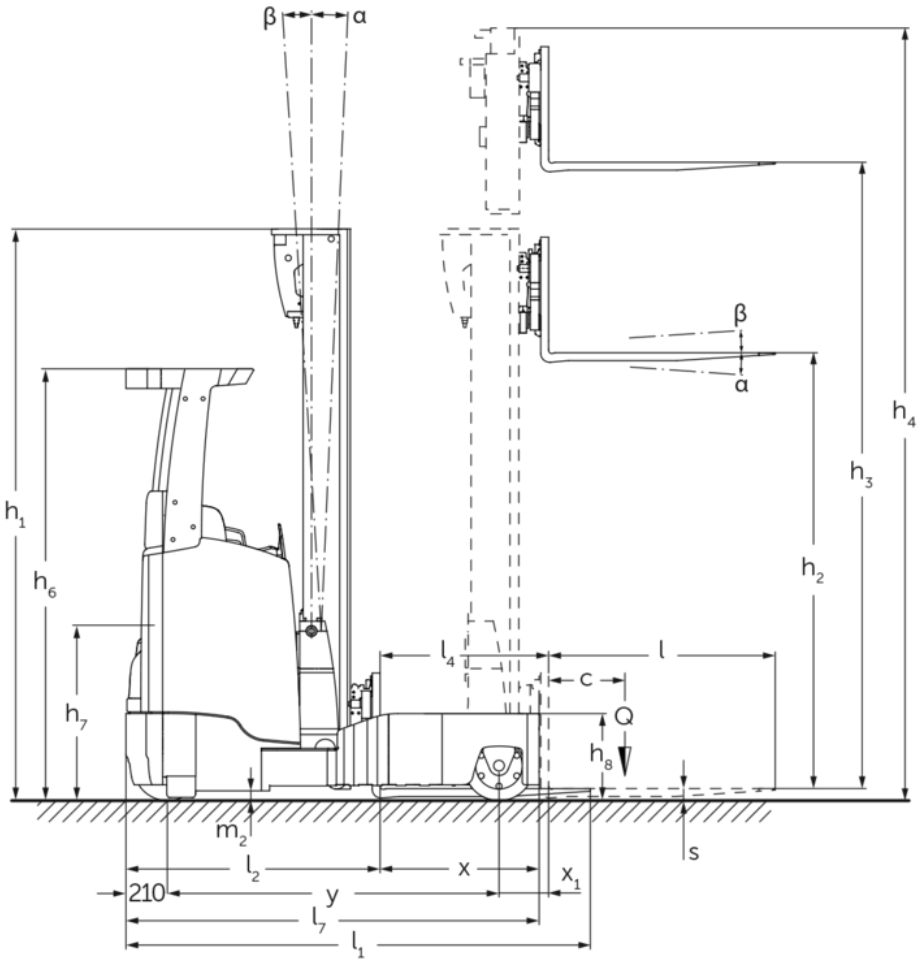
β
α
h1
h6
h7
h4
h3
h2
l4
l
c
Q
h8
m2
l2
x
x1
210
y
l7
l1
s

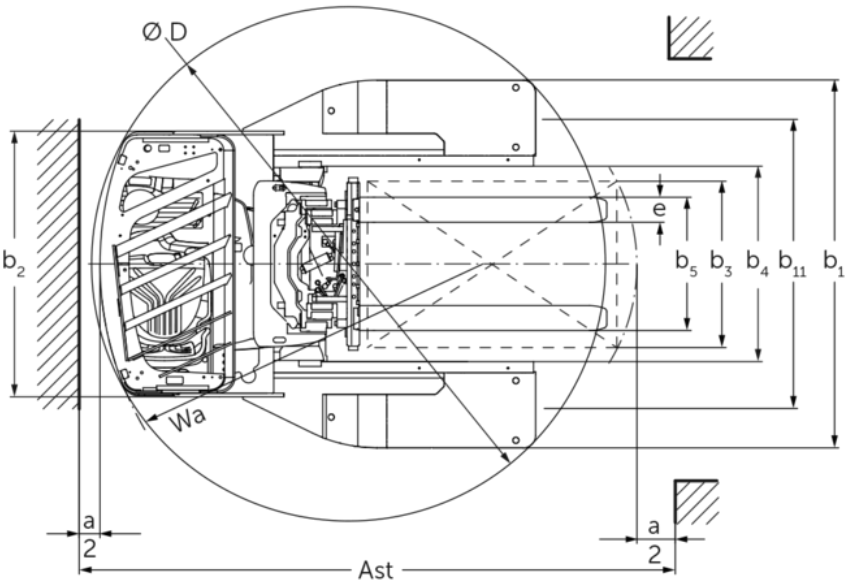
Ø D
b2
e
b5
b3
b4
b11
b1
Wa
a
2
Ast

ETV Q20/Q25

ETV Q20, ETV Q25	Lift (h3)	Retracted mast height (h1)	Free lift (h2)	Extended mast height (h4)	Forward/ backward tilt of mast	Forward/ backward tilt of fork carriage
Fork tilt / Triplex mast DZ-V / cold-formed	6200 mm	2700 mm	1970 mm	6930 mm		2 / 5 °
	6500 mm	2800 mm	2070 mm	7230 mm		2 / 5 °
	6800 mm	2900 mm	2170 mm	7530 mm		2 / 5 °
	7400 mm	3100 mm	2370 mm	8130 mm		2 / 5 °
	7700 mm	3200 mm	2470 mm	8430 mm		2 / 5 °
	8000 mm	3300 mm	2570 mm	8730 mm		2 / 5 °
	8420 mm	3440 mm	2710 mm	9150 mm		2 / 5 °
	8720 mm	3540 mm	2810 mm	9450 mm		2 / 5 °
	9110 mm	3670 mm	2940 mm	9840 mm		2 / 5 °
	9620 mm	3840 mm	3110 mm	10350 mm		2 / 5 °
	9950 mm	3950 mm	3220 mm	10680 mm		2 / 5 °
	10220 mm	4100 mm	3370 mm	10950 mm		2 / 5 °
	10520 mm	4200 mm	3470 mm	11250 mm		2 / 5 °
	10700 mm	4260 mm	3530 mm	11430 mm		2 / 5 °
Mast tilt without side shift / Triplex mast DZ-V / cold-formed	4250 mm	2050 mm	1320 mm	4980 mm	1 / 5 °	
	4700 mm	2200 mm	1470 mm	5430 mm	1 / 5 °	
	5000 mm	2300 mm	1570 mm	5730 mm	1 / 5 °	
	5300 mm	2400 mm	1670 mm	6030 mm	1 / 5 °	
	5600 mm	2500 mm	1770 mm	6330 mm	1 / 3 °	
	5900 mm	2600 mm	1870 mm	6630 mm	1 / 3 °	
	6200 mm	2700 mm	1970 mm	6930 mm	1 / 3 °	
	6500 mm	2800 mm	2070 mm	7230 mm	1 / 3 °	
	6800 mm	2900 mm	2170 mm	7530 mm	1 / 3 °	
	6950 mm	2950 mm	2220 mm	7680 mm	1 / 3 °	
	7400 mm	3100 mm	2370 mm	8130 mm	1 / 3 °	
	8000 mm	3300 mm	2570 mm	8730 mm	1 / 3 °	
	8420 mm	3440 mm	2710 mm	9150 mm	1 / 3 °	

	8720 mm	3540 mm	2810 mm	9450 mm	1 / 3 °
	9110 mm	3670 mm	2940 mm	9840 mm	1 / 3 °

VDI table

Characteristic	1.1	Manufacturer (abbreviated description)			Jungheinrich	
	1.2	Manufacturer's type designation			ETV Q20	ETV Q25
	1.3	Drive type			electric	
	1.4	Operation			Sideways-seated	
	1.5	Load capacity/load	Q	kg	2000	2500
	1.6	Load centre distance	c	mm	600	
	1.8	Load distance, centre of drive axle to fork	x	mm	449	
	1.8.1	Load distance, centre of drive axle to fork, mast extended		mm	230	
	1.9	Wheelbase	y	mm	1528	1638
Weights	2.1.1	Service weight (incl. battery)		kg	3700	
	2.3	Axle load unladen front/rear		kg	2264 / 1436	
	2.4	Axle load fork forward laden front/rear		kg	602 / 5598	
	2.5	Axle load fork back laden front/rear		kg	2032 / 4168	
Wheels/chassis	3.1	Tyres			Polyurethane (PU)	
	3.2	Tyre size, front			Ø 343 x 140	
	3.3	Tyre size, rear			Ø 355 x 135	
	3.5	Wheels, number front/back (x=driven)			1x / 2	
	3.7	Tread width, rear	b11	mm	1420	
Basic dimensions	4.1	Forward/backward tilt of mast	a/ß	°	1 / 5	
	4.2	Retracted mast height (h1)	h1	mm	2400	
	4.3	Free lift (h2)	h2	mm	1670	
	4.4	Lift (h3)	h3	mm	5300	
	4.5	Extended mast height (h4)	h4	mm	6030	
	4.7	Height of overhead guard (cab)	h6	mm	2190	
	4.8	Seat height/stand height	h7	mm	1057	
	4.10	Height of support arms	h8	mm	440	
	4.19	Total length	l1	mm	2439	2511
	4.20	Length including fork shank	l2	mm	1289	1361
	4.21.1	Total width	b1	mm	1770	
	4.21.2	Total width	b2	mm	1270	
	4.22	Fork dimensions	s/e/l	mm	50 x 140 x 1150	
	4.23	Fork carriage connection class			2B	
	4.24	Fork carriage width	b3	mm	830	
	4.25	Width across forks	b5	mm	356	
	4.25.1	Width across forks (min./max.)	b5	mm	356 / 750	
	4.26	Width between support arms/loading areas	b4	mm	940	
	4.28	Reach distance		mm	679	762
	4.32	Ground clearance centre of wheelbase	m2	mm	95	
	4.34.1	Aisle width (pallet 1000×1200 sideways)	Ast	mm	2756	2854
	4.34.2	Aisle width (pallet 800x1200 length)	Ast	mm	2792	2872
	4.35	Turning radius	Wa	mm	1741	1893
	4.37	Length over the support arms	L7	mm	1957	2112

Performance data	5.1	Travel speed laden/unladen	km/h	14 / 14	
	5.2	Lift speed laden/unladen	m/s	0.38 / 0.64	0.35 / 0.64
	5.3	Lowering speed laden/unladen	m/s	0.55 / 0.55	
	5.4	Reach speed laden/unladen	m/s	0.2 / 0.2	
	5.7	Gradeability laden/unladen	%	7 / 11	
	5.8	Max. gradeability laden/unladen	%	10 / 15	
	5.9	Acceleration time laden/unladen	s	5.3 / 4.8	5.6 / 4.9
	5.10	Service brake		electric	
Electric motor/electronics	6.1	Drive motor, performance S2 60 min	kW	8.5	
	6.2	Lift motor, performance with S3	kW	15.5	
	6.3	Battery according to DIN 43531/35/36		DIN 43531 C	
	6.4	Battery voltage/nominal capacity	V / Ah	48 / 620	
	6.5	Battery weight	kg	1005	
	6.6.1	Energy consumption according to EN cycle	kWh/h	4.31	5
	6.6.2	CO2 equivalent according to EN ISO 23308	kg/h	2.33	2.7
	6.7	Throughput	t/h	79.73	97.61
	6.8	Turnover efficiency according to VDI 2198	t/kWh	16.9	19.6
	6.8.1	Energy consumption with max. throughput	kWh/h	4.71	4.98
Other	8.1	Type of drive control		Mosfet/AC	
	10.1	Operating pressure for attachment	bar	150	
	10.2	Oil flow for attachments	l/min	20	
	10.7	Sound pressure level according to EN12053	dB (A)	70	

- This data sheet according to VDI guideline 2198 only states the technical values of the standard truck. Different tyres, other masts, additional equipment etc. may result in different values.

- VDI no. 1.8: battery size and mast type affect load distance x
- VDI no. 2.1.1: battery size and mast version affect service weight and axle loads
- VDI no. 2.3: battery size and mast version affect service weight and axle loads
- VDI no. 2.4: battery size and mast version affect service weight and axle loads
- VDI no. 2.5: battery size and mast version affect service weight and axle loads
- VDI no. 4.1: the mast version determines the tilt values
- VDI no. 4.19: battery size, mast type and fork length affect the overall length l1
- VDI no. 4.20: battery size and mast type affect the length including fork shank l2
- VDI no. 4.28: battery size and mast type affect the reach distance l4
- VDI no. 4.34.1: battery size and mast type affect the aisle widths
- VDI no. 4.34.2: battery size and mast type affect the aisle widths
- The information in this document relates to the drive&liftPLUS performance package

The German production facilities in Norderstedt, Moosburg and Landsberg are certified as well as our Genuine Parts Center in Kaltenkirchen.

ISO 9001
ISO 14001

Jungheinrich fork lift trucks meet European safety requirements.

CE

JUNGHEINRICH