

Electric Reach Truck

ETV/ETM 318–325

Lift height: 4250-14000 mm / Load capacity: 1800-2500 kg

LI-ION technology

JUNGHEINRICH

ETV/ETM 318–325

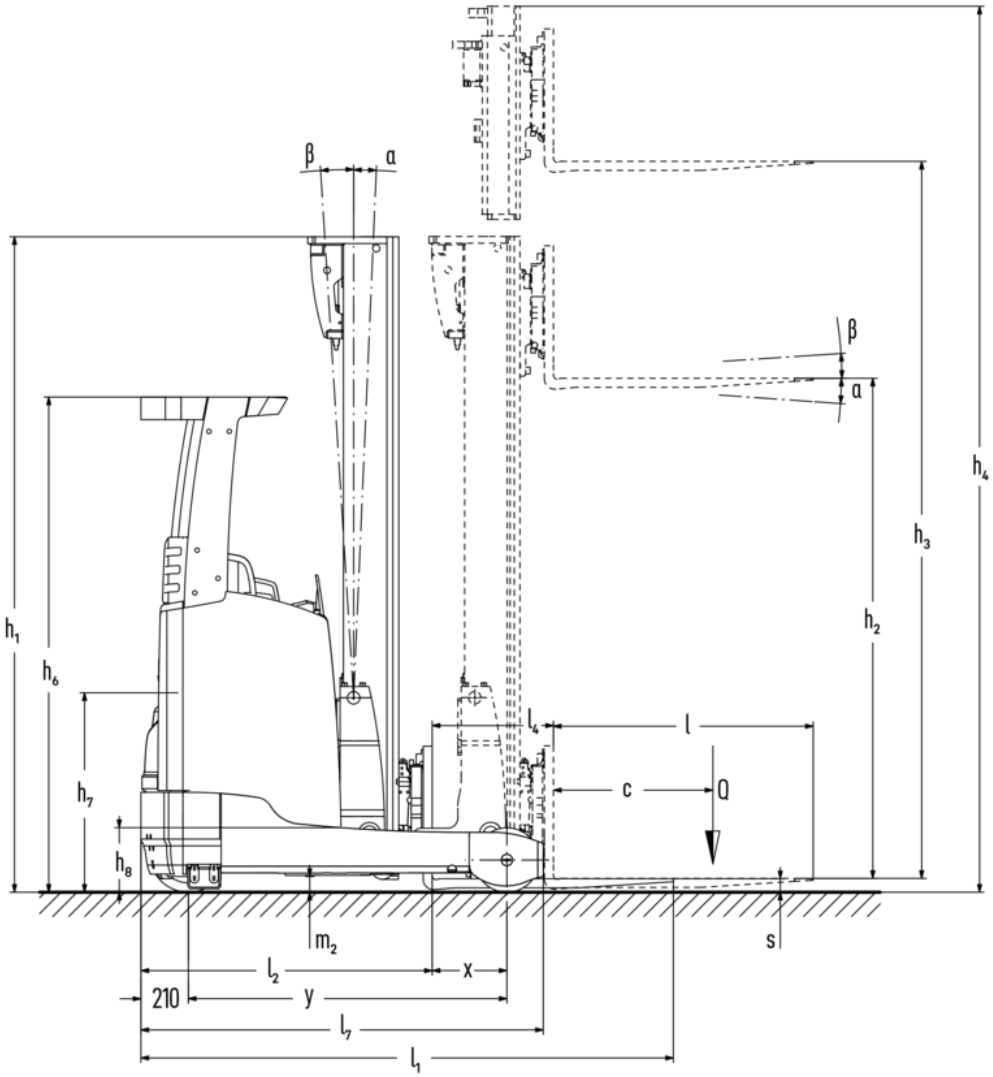

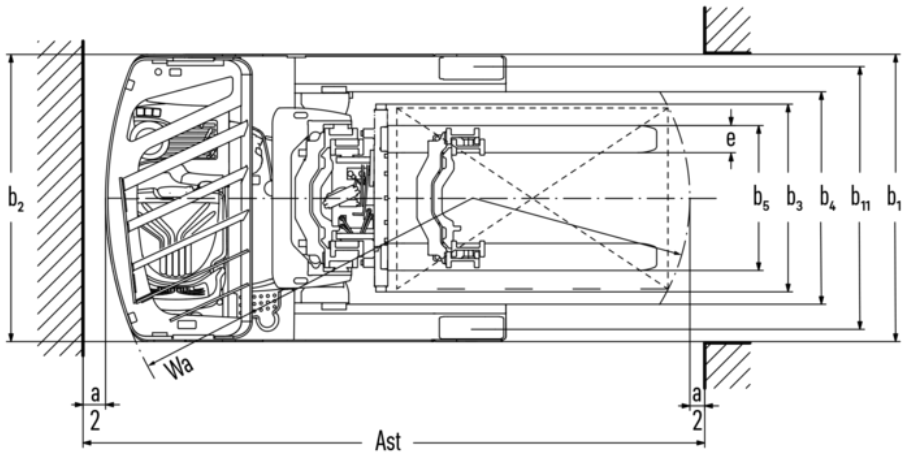

ETV/ETM 318–325

ETV 318, ETV 320, ETM 325, ETV 325	Lift (h3)	Retracted mast height (h1)	Free lift (h2)	Extended mast height (h4)	Forward/ backward tilt of mast	Forward/ backward tilt of fork carriage
Fork tilt / Triplex mast DZ-V / cold-formed	6200 mm	2700 mm	1970 mm	6930 mm		2 / 5 °
	6500 mm	2800 mm	2070 mm	7230 mm		2 / 5 °
	6800 mm	2900 mm	2170 mm	7530 mm		2 / 5 °
	7400 mm	3100 mm	2370 mm	8130 mm		2 / 5 °
	7700 mm	3200 mm	2470 mm	8430 mm		2 / 5 °
	8000 mm	3300 mm	2570 mm	8730 mm		2 / 5 °
	8420 mm	3440 mm	2710 mm	9150 mm		2 / 5 °
	8720 mm	3540 mm	2810 mm	9450 mm		2 / 5 °
	9110 mm	3670 mm	2940 mm	9840 mm		2 / 5 °
	9620 mm	3840 mm	3110 mm	10350 mm		2 / 5 °
	9950 mm	3950 mm	3220 mm	10680 mm		2 / 5 °
	10220 mm	4100 mm	3370 mm	10950 mm		2 / 5 °
	10520 mm	4200 mm	3470 mm	11250 mm		2 / 5 °
	10700 mm	4260 mm	3530 mm	11430 mm		2 / 5 °
	10880 mm	4320 mm	3590 mm	11610 mm		2 / 5 °
	11120 mm	4400 mm	3670 mm	11850 mm		2 / 5 °
	11510 mm	4530 mm	3800 mm	12240 mm		2 / 5 °
ETV 318, ETV 320, ETV 325	**Lift (h3)**	**Retracted mast height (h1)**	**Free lift (h2)**	**Extended mast height (h4)**	**Forward/ backward tilt of mast**	**Forward/ backward tilt of fork carriage**
Fork tilt / Triplex mast DZ-V / cold-formed	10952 mm	4344 mm	3614 mm	11682 mm		2 / 5 °
Mast tilt / Triplex mast DZ-V / cold-formed	4250 mm	2050 mm	1320 mm	4980 mm	1 / 5 °	
	4700 mm	2200 mm	1470 mm	5430 mm	1 / 5 °	
	5000 mm	2300 mm	1570 mm	5730 mm	1 / 5 °	
	5300 mm	2400 mm	1670 mm	6030 mm	1 / 5 °	
	5600 mm	2500 mm	1770 mm	6330 mm	1 / 3 °	
	5900 mm	2600 mm	1870 mm	6630 mm	0.5 / 2 °	

	6200 mm	2700 mm	1970 mm	6930 mm	0.5 / 2 °	
	6500 mm	2800 mm	2070 mm	7230 mm	0.5 / 2 °	
	6800 mm	2900 mm	2170 mm	7530 mm	0.5 / 2 °	
	6950 mm	2950 mm	2220 mm	7680 mm	0.5 / 1 °	
	7400 mm	3100 mm	2370 mm	8130 mm	0.5 / 1 °	
	8000 mm	3300 mm	2570 mm	8730 mm	0.5 / 1 °	
	8420 mm	3440 mm	2710 mm	9150 mm	0.5 / 1 °	
	8720 mm	3540 mm	2810 mm	9450 mm	0.5 / 1 °	
	9110 mm	3670 mm	2940 mm	9840 mm	0.5 / 1 °	
ETV 320	**Lift (h3)**	**Retracted mast height (h1)**	**Free lift (h2)**	**Extended mast height (h4)**	**Forward/ backward tilt of mast**	**Forward/ backward tilt of fork carriage**
Fork tilt / Triplex mast DZ-V / cold-formed	13505 mm	5425 mm	4695 mm	14235 mm		2 / 5 °
	14000 mm	5590 mm	4860 mm	14730 mm		2 / 5 °
ETV 320, ETV 325	**Lift (h3)**	**Retracted mast height (h1)**	**Free lift (h2)**	**Extended mast height (h4)**	**Forward/ backward tilt of mast**	**Forward/ backward tilt of fork carriage**
Fork tilt / Triplex mast DZ-V / cold-formed	12020 mm	4700 mm	3970 mm	12750 mm		2 / 5 °
	12530 mm	4870 mm	4140 mm	13260 mm		2 / 5 °
	12830 mm	4970 mm	4240 mm	13560 mm		2 / 5 °
	13000 mm	5026 mm	4296 mm	13728 mm		2 / 5 °

VDI table

Characteristic	1.1	Manufacturer (abbreviated description)			Jungheinrich			
	1.2	Manufacturer's type designation			ETV 318	ETV 320	ETM 325	ETV 325
	1.3	Drive type			electric			
	1.4	Operation			Sideways-seated			
	1.5	Load capacity/load	Q	kg	1800	2000	2500	
	1.6	Load centre distance	c	mm	600			
	1.8	Load distance, centre of drive axle to fork	x	mm	364	412	321	487
	1.8.1	Load distance, centre of drive axle to fork, mast extended		mm	205	230		
	1.9	Wheelbase	y	mm	1460	1518	1673	
Weights	2.1.1	Service weight (incl. battery)		kg	3522	3650	3895	3700
	2.3	Axle load unladen front/rear		kg	2074 / 1448	2163 / 1487	2274 / 1621	2264 / 1436
	2.4	Axle load fork forward laden front/rear		kg	446 / 4876	558 / 5092	366 / 6029	602 / 5598
	2.5	Axle load fork back laden front/rear		kg	1805 / 3517	1953 / 3397	2057 / 4338	2032 / 4168
Wheels/chassis	3.1	Tyres			Polyurethane (PU)			
	3.2	Tyre size, front			Ø 343 x 114		Ø 343 x 140	
	3.3	Tyre size, rear			Ø 285 x 100	Ø 355 x 106	Ø 355 x 135	
	3.5	Wheels, number front/back (x=driven)			1x / 2			
	3.7	Tread width, rear	b11	mm	1136	1155	1034	1184
Basic dimensions	4.1	Forward/backward tilt of mast	a/ß	°	1 / 5			
	4.2	Retracted mast height (h1)	h1	mm	2400			
	4.3	Free lift (h2)	h2	mm	1670			
	4.4	Lift (h3)	h3	mm	5300			
	4.5	Extended mast height (h4)	h4	mm	6030			
	4.7	Height of overhead guard (cab)	h6	mm	2190			
	4.8	Seat height/stand height	h7	mm	1057			
	4.10	Height of support arms	h8	mm	285	355		
	4.19	Total length	l1	mm	2456	2466	2712	2546
	4.20	Length including fork shank	l2	mm	1306	1316	1562	1396
	4.21.1	Total width	b1	mm	1270	1290	1198	1348
	4.21.2	Total width	b2	mm	1270		1120	1270
	4.22	Fork dimensions	s/e/l	mm	40 x 120 x 1150	50 x 140 x 1150		
	4.23	Fork carriage connection class			2B			
	4.24	Fork carriage width	b3	mm	830			
	4.25	Width across forks	b5	mm	335	356		
	4.25.1	Width across forks (min./max.)	b5	mm	335 / 730	356 / 750	356 / 580	356 / 750
	4.26	Width between support arms/loading areas	b4	mm	940		790	940
	4.28	Reach distance		mm	569	624	551	736
	4.32	Ground clearance centre of wheelbase	m2	mm	80	95		
	4.34.1	Aisle width (pallet 1000×1200 sideways)	Ast	mm	2737	2750	2971	2854
	4.34.2	Aisle width (pallet 800x1200 length)	Ast	mm	2790	2794	3031	2883
	4.35	Turning radius	Wa	mm	1663	1710	1865	
	4.37	Length over the support arms	L7	mm	1842	1920	2075	

Performance data	5.1	Travel speed laden/unladen (Efficiency | drivePLUS)	km/h	11 / 11 | 14 / 14		- / - | 14 / 14	
	5.2	Lift speed laden/unladen (Efficiency | liftPLUS)	m/s	0.32 / 0.64 | 0.38 / 0.64		- / - | 0.35 / 0.64	
	5.3	Lowering speed laden/unladen (Efficiency | liftPLUS)	m/s	0.55 / 0.55 | 0.55 / 0.55		- / - | 0.55 / 0.55	
	5.4	Reach speed laden/unladen (Efficiency | liftPLUS)	m/s	0.18 / 0.18 | 0.2 / 0.2		- / - | 0.2 / 0.2	
	5.7	Gradeability laden/unladen (Efficiency | drivePLUS)	%	7 / 11 | 7 / 11		- | 7 / 11	
	5.8	Max. gradeability laden/unladen (Efficiency | drivePLUS)	%	9 / 13 | 9 / 13	10 / 15 | 10 / 15	- / - | 10 / 15	
	5.9	Acceleration time laden/unladen (Efficiency | drivePLUS)	s	5.4 / 5 | 5.2 / 4.7	5.6 / 5 | 5.3 / 4.7	- / - | 5.4 / 4.7	
	5.10	Service brake		electric			
Electric motor/electronics	6.1	Drive motor, performance S2 60 min (Efficiency | drivePLUS)	kW	6 | 8.5		- | 8.5	
	6.2	Lift motor, performance with S3 (Efficiency | liftPLUS)	kW	13.3 | 15.5		- | 15.5	
	6.3	Battery according to DIN 43531/35/36		DIN 43531 C		DIN 43531 B	DIN 43531 C
	6.4	Battery voltage/nominal capacity	V / Ah	48 / 620		48 / 775	48 / 620
	6.5	Battery weight	kg	1005		1210	1005
	6.6.1	Energy consumption according to EN cycle (Efficiency | PLUS)	kWh/h	3.77 | 3.73	3.89 | 4.57	- | 4.57	
	6.6.2	CO2 equivalent according to EN ISO 23308 (Efficiency | PLUS)	kg/h	2.04 | 2	2.1 | 2.5	- | 2.5	
	6.7	Throughput (Efficiency | PLUS)	t/h	60.85 | 73.39	67.48 | 76.51	- | 95.14	
	6.8	Turnover efficiency according to VDI 2198 (Efficiency | PLUS)	t/kWh	18.7 | 15.7	19.1 | 16.5	- | 20.8	
	6.8.1	Energy consumption with max. throughput (Efficiency | PLUS)	kWh/h	3.25 | 4.66	3.54 | 4.64	- | 4.57	
Other	8.1	Type of drive control		Mosfet/AC			
	10.1	Operating pressure for attachment	bar	150			
	10.2	Oil flow for attachments	l/min	20			
	10.7	Sound pressure level according to EN12053	dB (A)	68			

- This data sheet according to VDI guideline 2198 only states the technical values of the standard truck. Different tyres, other masts, additional equipment etc. may result in different values.

- VDI no. 1.8: battery size and mast type affect load distance x
- VDI no. 2.1.1: the battery size and mast version affect service weight and axle loads
- VDI no. 2.3: the battery size and mast version affect service weight and axle loads
- VDI no. 2.4: the battery size and mast version affect service weight and axle loads
- VDI no. 2.5: the battery size and mast version affect service weight and axle loads
- VDI no. 4.1: the mast version determines the tilt values
- VDI no. 4.10: the height of the support arms is increased by 30 mm with a load wheel cover
- VDI no. 4.19: the battery size, mast type and fork length affect the overall length l1
- VDI no. 4.20: the battery size and mast type affect the length including fork shank l2
- VDI no. 4.28: battery size and mast type affect the reach distance l4
- VDI no. 4.34.1: the battery size and mast type affect the aisle widths
- VDI no. 4.34.2: the battery size and mast type affect the aisle widths
- VDI no. 6.6.1: PLUS refers to the drive&liftPLUS performance package
- VDI no. 6.6.2: PLUS refers to the drive&liftPLUS performance package
- VDI no. 6.7: PLUS refers to the drive&liftPLUS performance package
- VDI no. 6.8.1: PLUS refers to the drive&liftPLUS performance package

The German production facilities in Norderstedt, Moosburg and Landsberg are certified as well as our Genuine Parts Center in Kaltenkirchen.

ISO 9001
ISO 14001

Jungheinrich fork lift trucks meet European safety requirements.

CE

JUNGHEINRICH