

Electric 4-wheel forklift truck

EFG MC 316k–330

Lift height: 3000-6500 mm / Load capacity: 1600-3000 kg

LI-ION technology

EFG MC 316k–330

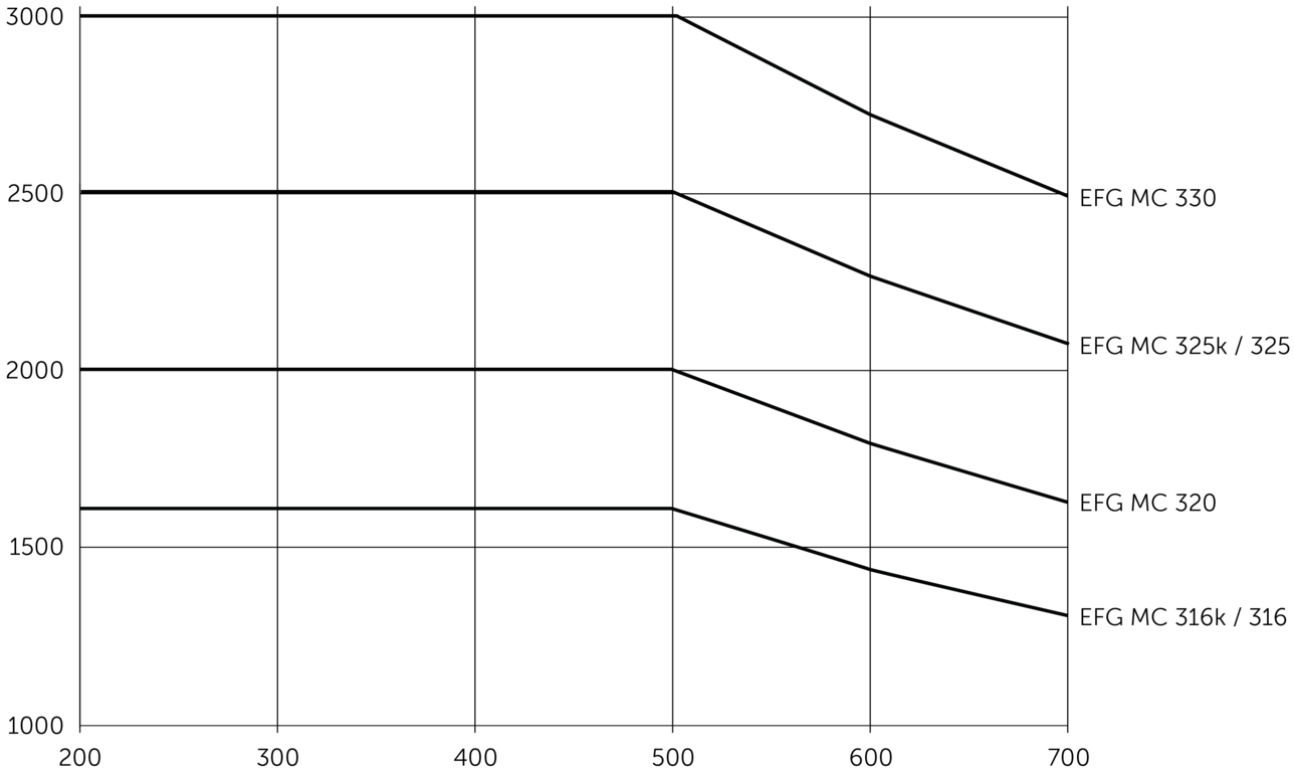

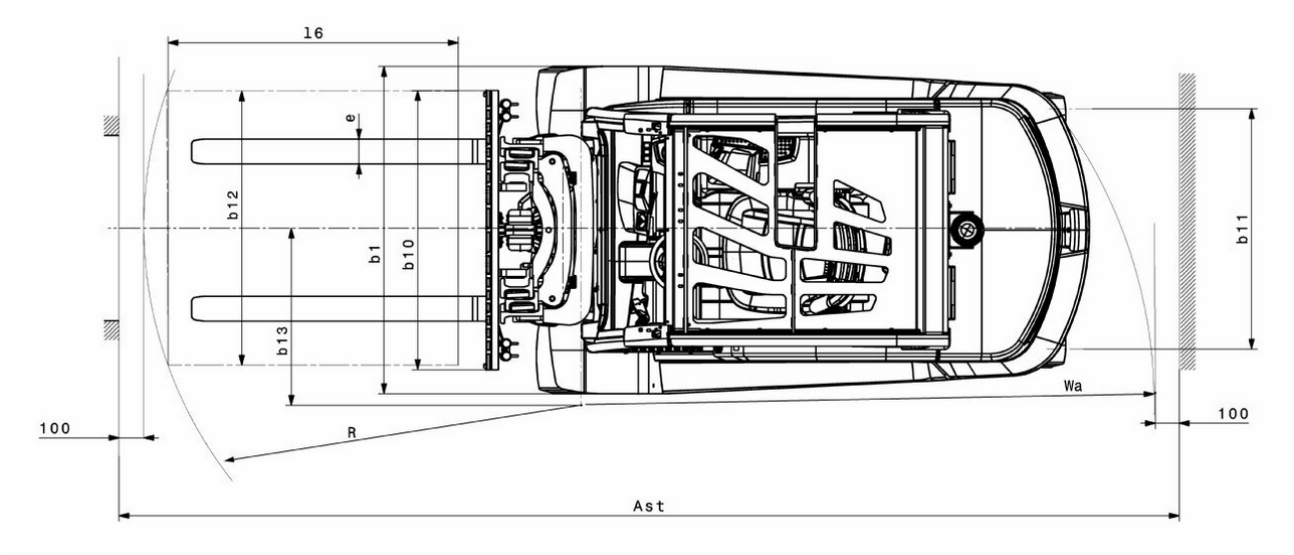

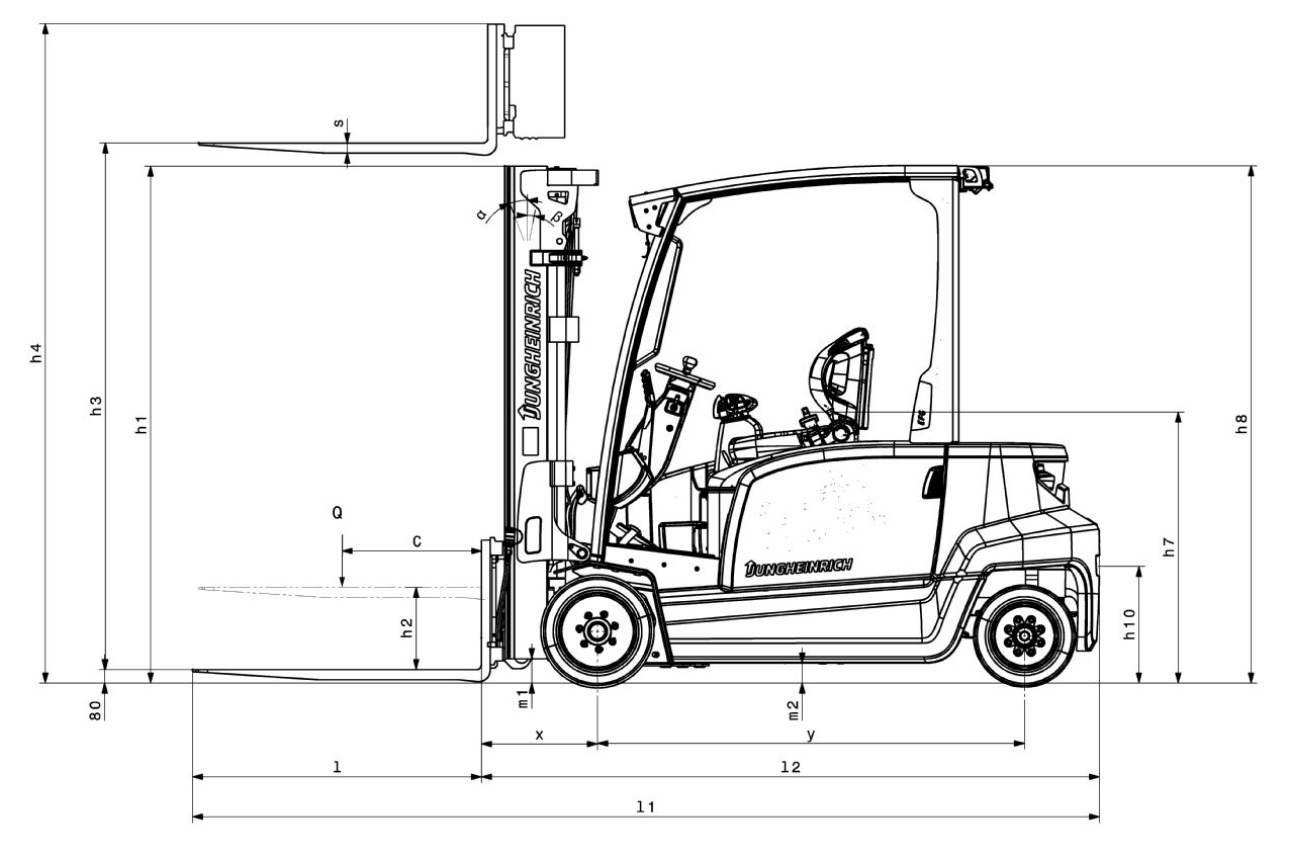
s
α
β
h4
h3
h1
h8
Q
c
h2
h7
h10
80
m1
m2
x
y
l
l2
l1

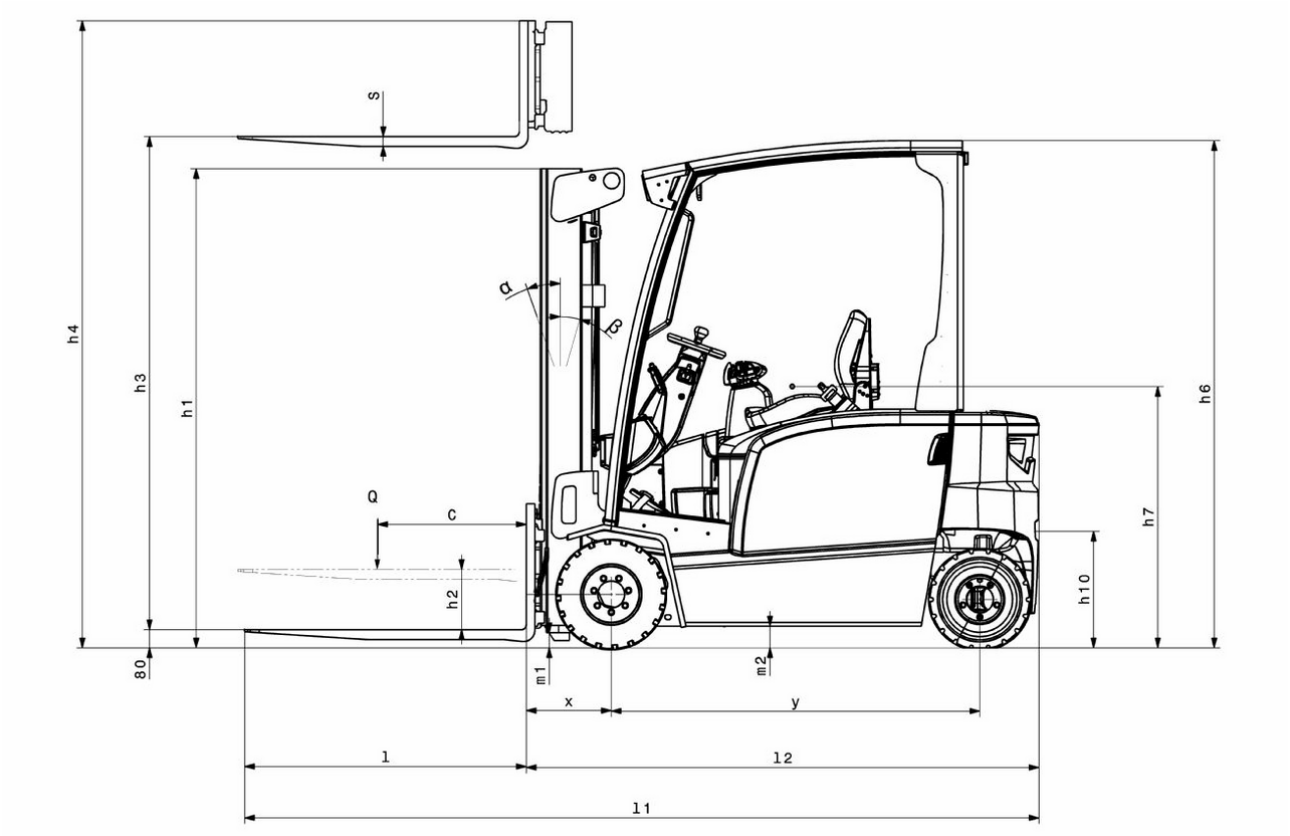
s
α
β
h4
h3
h1
h6
Q
c
h2
h7
h10
80
m1
m2
x
y
l
l2
l1

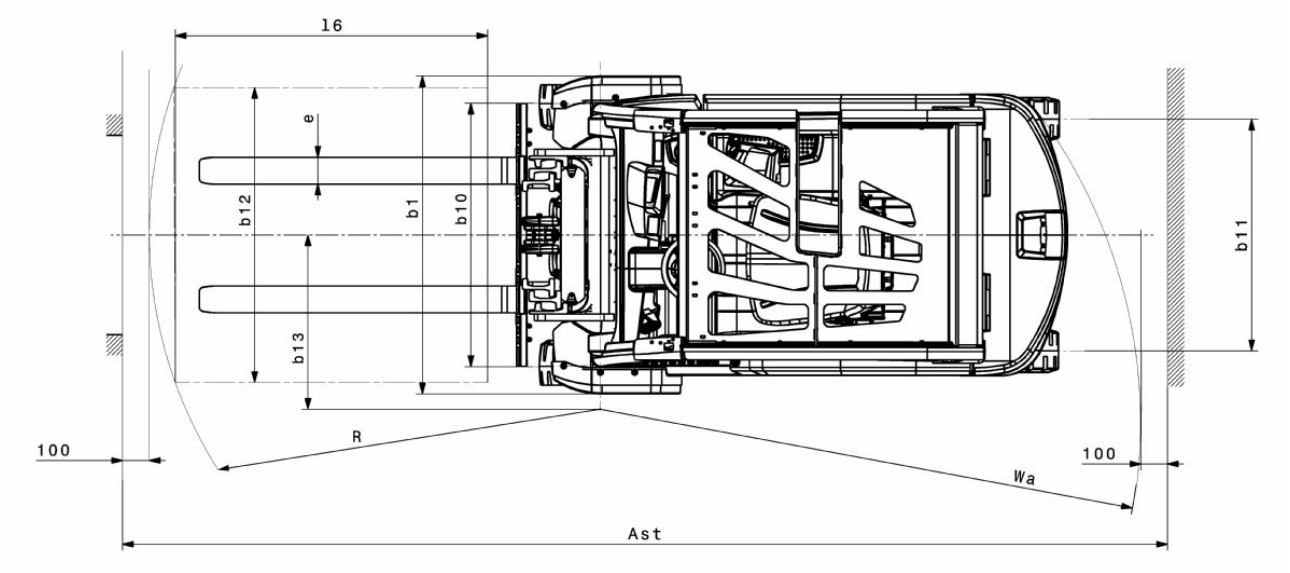
16
e
b12
b1
b10
b13
b11
R
Wa
100
100
Ast

EFG MC 316k–330

EFG MC 316k, EFG MC 316	Lift (h3)	Retracted mast height (h1)	Free lift (h2)	Extended mast height (h4)	Forward/ backward tilt of mast
Mast tilt / Duplex mast ZT / hot-rolled	3000 mm	2000 mm	150 mm	3555 mm	7 / 5 °
	3300 mm	2150 mm	150 mm	3855 mm	7 / 5 °
	3600 mm	2300 mm	150 mm	4155 mm	7 / 5 °
	4000 mm	2500 mm	150 mm	4555 mm	7 / 5 °
	4500 mm	2800 mm	150 mm	5055 mm	7 / 5 °
	5000 mm	3050 mm	150 mm	5555 mm	7 / 5 °
Mast tilt / Duplex mast ZZ / hot-rolled	3300 mm	2105 mm	1470 mm	3855 mm	7 / 5 °
	3600 mm	2255 mm	1620 mm	4155 mm	7 / 5 °
	4000 mm	2455 mm	1820 mm	4555 mm	7 / 5 °
Mast tilt / Triplex mast DZ / hot-rolled	4500 mm	2005 mm	1360 mm	5055 mm	7 / 5 °
	4800 mm	2105 mm	1460 mm	5355 mm	7 / 5 °
	5000 mm	2180 mm	1530 mm	5555 mm	7 / 5 °
	5500 mm	2355 mm	1710 mm	6055 mm	7 / 5 °
	6000 mm	2555 mm	1910 mm	6555 mm	7 / 5 °
	6500 mm	2805 mm	2160 mm	7055 mm	7 / 5 °
EFG MC 320	**Lift (h3)**	**Retracted mast height (h1)**	**Free lift (h2)**	**Extended mast height (h4)**	**Forward/ backward tilt of mast**
Mast tilt / Duplex mast ZT / hot-rolled	3000 mm	2000 mm	150 mm	3605 mm	7 / 5 °
	3300 mm	2150 mm	150 mm	3905 mm	7 / 5 °
	3600 mm	2300 mm	150 mm	4205 mm	7 / 5 °
	4000 mm	2500 mm	150 mm	4605 mm	7 / 5 °
	4500 mm	2800 mm	150 mm	5105 mm	7 / 5 °
	5000 mm	3050 mm	150 mm	5605 mm	7 / 5 °
Mast tilt / Duplex mast ZZ / hot-rolled	3300 mm	2105 mm	1470 mm	3935 mm	7 / 5 °
	3600 mm	2255 mm	1620 mm	4235 mm	7 / 5 °
	4000 mm	2455 mm	1820 mm	4635 mm	7 / 5 °
Mast tilt / Triplex mast DZ / hot-rolled	4500 mm	2005 mm	1360 mm	5135 mm	7 / 5 °

	4800 mm	2105 mm	1460 mm	5435 mm	7 / 5 °
	5000 mm	2180 mm	1530 mm	5635 mm	7 / 5 °
	5500 mm	2355 mm	1710 mm	6135 mm	7 / 5 °
	6000 mm	2555 mm	1910 mm	6635 mm	7 / 5 °
	6500 mm	2805 mm	2160 mm	7135 mm	7 / 5 °
EFG MC 325k, EFG MC 325	**Lift (h3)**	**Retracted mast height (h1)**	**Free lift (h2)**	**Extended mast height (h4)**	**Forward/ backward tilt of mast**
Mast tilt / Duplex mast ZT / hot-rolled	3100 mm	2200 mm	150 mm	3700 mm	7 / 5 °
	3300 mm	2300 mm	150 mm	3900 mm	7 / 5 °
	3500 mm	2400 mm	150 mm	4100 mm	7 / 5 °
	3700 mm	2500 mm	150 mm	4300 mm	7 / 5 °
	4000 mm	2650 mm	150 mm	4600 mm	7 / 5 °
	4500 mm	2950 mm	150 mm	5100 mm	7 / 5 °
Mast tilt / Duplex mast ZZ / hot-rolled	3100 mm	2160 mm	1600 mm	3700 mm	7 / 5 °
	3300 mm	2260 mm	1700 mm	3900 mm	7 / 5 °
	3500 mm	2360 mm	1800 mm	4100 mm	7 / 5 °
	4000 mm	2610 mm	2060 mm	4600 mm	7 / 5 °
Mast tilt / Triplex mast DZ / hot-rolled	4400 mm	2060 mm	1500 mm	5000 mm	7 / 5 °
	4700 mm	2160 mm	1600 mm	5300 mm	7 / 5 °
	5000 mm	2260 mm	1700 mm	5600 mm	7 / 5 °
EFG MC 330	**Lift (h3)**	**Retracted mast height (h1)**	**Free lift (h2)**	**Extended mast height (h4)**	**Forward/ backward tilt of mast**
Mast tilt / Duplex mast ZT / hot-rolled	3100 mm	2200 mm	150 mm	3850 mm	7 / 5 °
	3300 mm	2300 mm	150 mm	4050 mm	7 / 5 °
	3500 mm	2400 mm	150 mm	4250 mm	7 / 5 °
	3700 mm	2500 mm	150 mm	4450 mm	7 / 5 °
	4000 mm	2650 mm	150 mm	4750 mm	7 / 5 °
	4500 mm	2950 mm	150 mm	5250 mm	7 / 5 °
Mast tilt / Duplex mast ZZ / hot-rolled	3100 mm	2160 mm	1440 mm	3850 mm	7 / 5 °
	3300 mm	2260 mm	1540 mm	4050 mm	7 / 5 °
	3500 mm	2360 mm	1640 mm	4250 mm	7 / 5 °

	4000 mm	2610 mm	1900 mm	4750 mm	7 / 5 °
Mast tilt / Triplex mast DZ / hot-rolled	4400 mm	2060 mm	1340 mm	5150 mm	7 / 5 °
	4700 mm	2160 mm	1440 mm	5450 mm	7 / 5 °
	5000 mm	2260 mm	1540 mm	5750 mm	7 / 5 °

VDI table

Characteristic	1.1	Manufacturer (abbreviated description)			Jungheinrich						
	1.2	Manufacturer's type designation			EFG MC 316K	EFG MC 316	EFG MC 320	EFG MC 325k	EFG MC 325	EFG MC 330	
	1.3	Drive type			electric						
	1.4	Operation			Seat						
	1.5	Load capacity/load	Q	kg	1600		2000	2500		3000	
	1.6	Load centre distance	c	mm	500						
	1.8	Load distance, centre of drive axle to fork	x	mm	352			467		472	
	1.9	Wheelbase	y	mm	1398	1506		1453	1561	1700	
Weights	2.1.1	Service weight (incl. battery)		kg	3261	3437	3768	4397	4502	4783	
	2.2	Axle load laden front/rear		kg	4094 / 767	3989 / 1048	4971 / 797	6207 / 690	6302 / 700	7004 / 779	
	2.3	Axle load unladen front/rear		kg	1596 / 1665	1699 / 1738	1880 / 1888	1855 / 2542	1981 / 2521	2248 / 2535	
Wheels/chassis	3.1	Tyres			Super-elastic (SE)						
	3.2	Tyre size, front			18x7-8		200/50-10	18 x 9 - 12		TANDEM, 18 x 5 & 6 - 12(1/8)	
	3.3	Tyre size, rear			16x6-8			16 x 6 -10 (1/2)		16 x 7 -10 (1/2)	
	3.5	Wheels, number front/back (x=driven)			2x/2			2x / 2			
	3.6	Tread width, front	b10	mm	904		924	938		1013	
	3.7	Tread width, rear	b11	mm	870			864		995	
Basic dimensions	4.1	Forward/backward tilt of mast	a/ß	°	7 / 5						
	4.2	Retracted mast height (h1)	h1	mm	2000			2200			
	4.2.1	Total height	h15	mm	2080			2200			
	4.3	Free lift (h2)	h2	mm	150						
	4.4	Lift (h3)	h3	mm	3000			3100			
	4.5	Extended mast height (h4)	h4	mm	3555		3605	3700		3850	
	4.7	Height of overhead guard (cab)	h6	mm	2080						
	4.8	Seat height/stand height	h7	mm	1030						
	4.12	Coupling height	h10	mm	475						
	4.19	Total length	l1	mm	2988	3096		3213	3321	3469	
	4.20	Length including fork shank	l2	mm	1988	2096		2213	2321	2469	
	4.21.1	total width	b1	mm	1060		1120	1170		1313	
	4.22	Fork dimensions	s/e/l	mm	40 x 100 x 1000					45 x 125 x 1000	
	4.23	Fork carriage connection class			2A					3A	
	4.24	Fork carriage width	b3	mm	980			1120			
	4.31	Ground clearance laden under mast	m1	mm	97						
	4.32	Ground clearance centre of wheelbase	m2	mm	83			88			
	4.34.1	Aisle width (pallet 1000×1200 sideways)	Ast	mm	3405	3513		3648	3767	3942	
	4.34.2	Aisle width (pallet 800x1200 length)	Ast	mm	3604	3712		3847	3967	4142	
	4.35	Turning radius	Wa	mm	1852	1960			2100	2270	
	4.36	Smallest pivot point distance	b13	mm	542	562		542	600	667	

Performance data	5.1	Travel speed laden/unladen (Efficiency | drivePLUS)	km/h	16 / 16 | 19 / 19	16 / 16 | 18.5 / 19	17 / 18 | 17 / 18	
	5.2	Lift speed laden/unladen (Efficiency | liftPLUS)	m/s	0.43 / 0.66 | 0.57 / 0.82	0.38 / 0.52 | 0.5 / 0.68	0.4 / 0.5 | 0.4 / 0.5	0.3 / 0.32 | 0.3 / 0.32
	5.3	Lowering speed laden/unladen	m/s	0.55 / 0.55			
	5.5	Drawbar pull laden/unladen	N	2100 / 2450	1900 / 2300	2400 / 2750	2300 / 3300
	5.6	Max. drawbar pull laden/unladen	N	13500 / 13500		14000 / 8700	13800 / 14600
	5.7	Gradeability laden/unladen	%	12 / 20		9 / 13	8 / 12
	5.8	Max. gradeability laden/unladen	%	24 / 35	22 / 35	16 / 22	15 / 22
	5.9	Acceleration time laden/unladen (Efficiency | drivePLUS)	s	5.2 / 4.9 | 5.2 / 4.8	5 / 4.5 | 4.8 / 4.2	5.6 / 5 | 5.6 / 5	5.7 / 5.2 | 5.7 / 5.2
	5.10	Service brake		mechanical/hydraulic			
Electric motor/electronics	6.1	Drive motor, performance S2 60 min	kW	4.6			
	6.1.1	2. Drive motor, performance S2 60 min	kW	4.6			
	6.2	Lift motor, performance with S3	kW	15.5			
	6.3	Battery according to DIN 43531/35/36		DIN 43531 A			
	6.4	Battery voltage/nominal capacity	V / Ah	48 / 625	48 / 750	48 / 625	48 / 750
	6.5	Battery weight	kg	856	1013	856	1013
	6.6.1	Energy consumption according to EN cycle (Efficiency | PLUS)	kWh/h	4.8 | 4.71	4.94 | 4.94	5.77 | 5.77	6.88 | 6.88
	6.6.2	CO2 equivalent according to EN ISO 23308 (Efficiency | PLUS)	kg/h	2.59 | 2.5	2.67 | 2.6	3.12 | 3.1	3.72 | 3.7
	6.7	Throughput (Efficiency | PLUS)	t/h	118 | 122	141 | 153	172 | 172	196 | 196
	6.8.1	Energy consumption with max. throughput (Efficiency | PLUS)	kWh/h	6.39 | 7.73	7.27 | 8.91	8.84 | 8.84	7.71 | 7.71
Other	8.1	Type of drive control		Impulse/AC			
	10.1	Operating pressure for attachment	bar	230			
	10.2	Oil flow for attachments	l/min	22		25	
	10.7	Sound pressure level according to EN12053	dB (A)	72		78	
	10.8	Trailer coupling, model/type DIN		Bolts			

- This data sheet according to VDI guideline 2198 only states the technical values of the standard truck. Different tyres, other masts, additional equipment etc. may result in different values.