

Electric 3-wheel forklift truck

EFG MB 216–220

Lift height: 3000-6500 mm / Load capacity: 1600-2000 kg

LI-ION technology

EFG MB 216–220

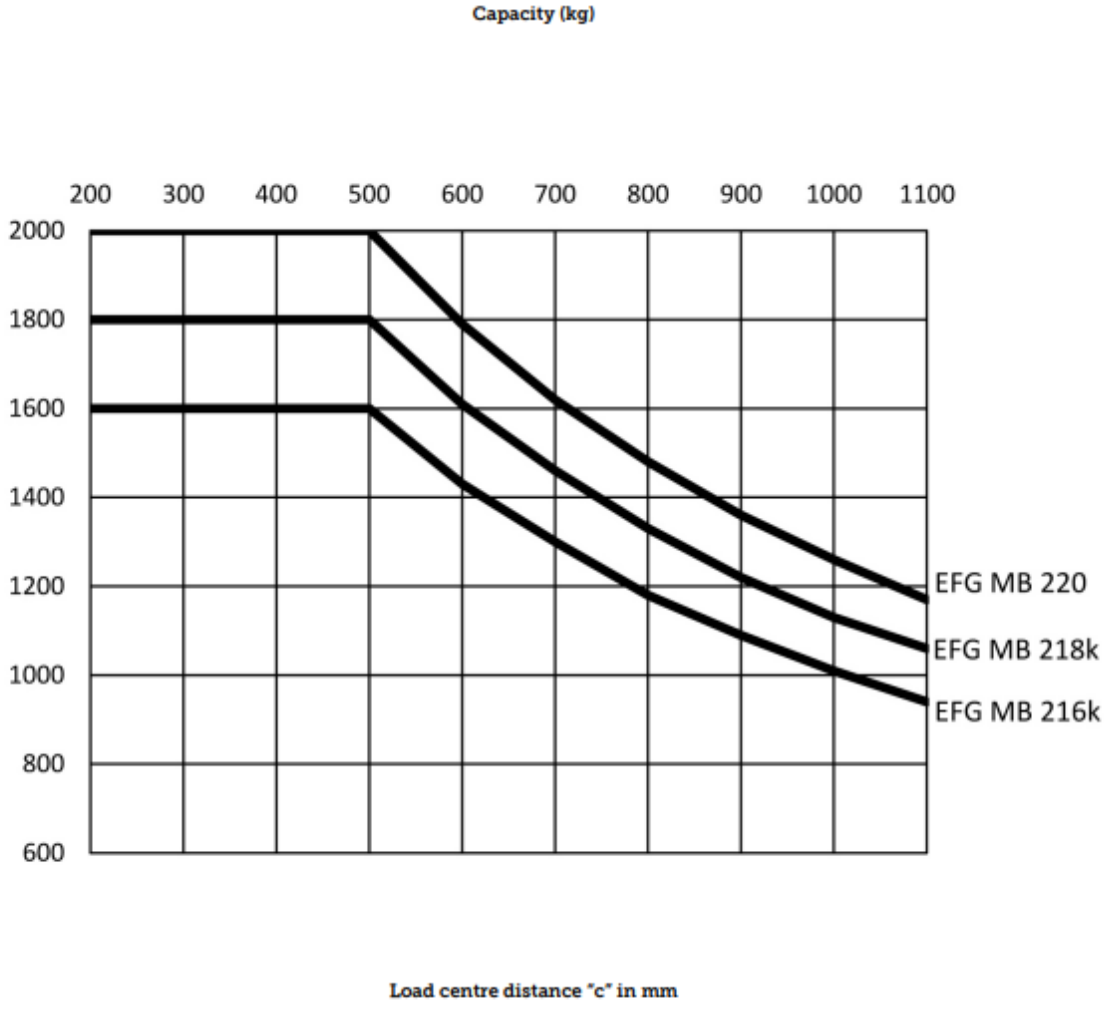

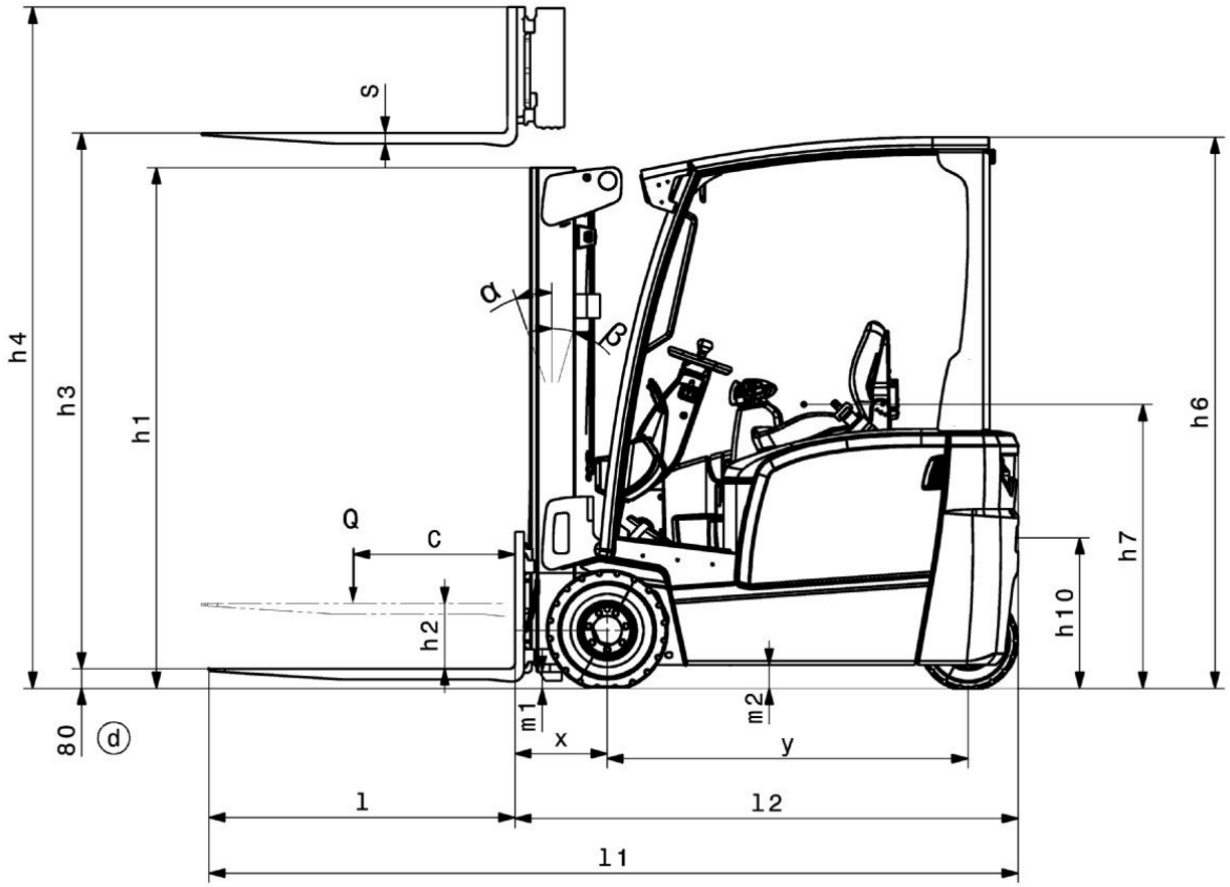
s
h4
h3
h1
α
β
h6
h7
h10
Q
c
h2
m1
m2
x
y
80
d
l
l2
l1

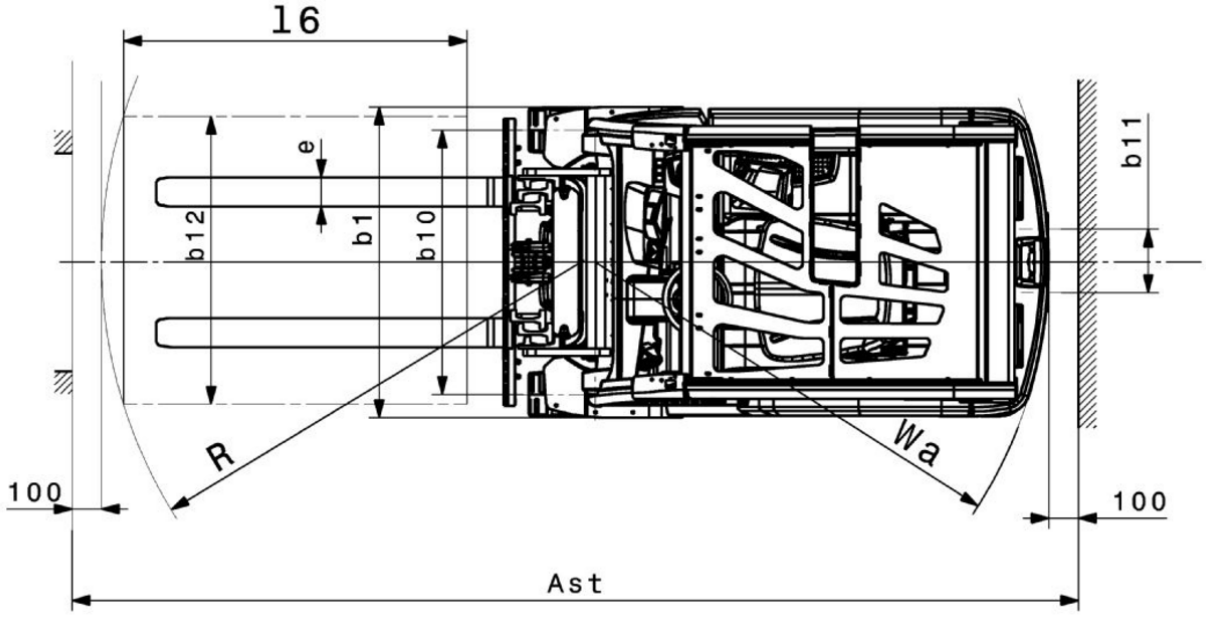
16
e
b12
b1
b10
b11
R
Wa
100
100
Ast

EFG MB 216–220

EFG MB 216k	Lift (h3)	Retracted mast height (h1)	Free lift (h2)	Extended mast height (h4)	Forward/ backward tilt of mast
Mast tilt / Duplex mast ZT / hot-rolled	3000 mm	2000 mm	150 mm	3555 mm	7 / 5 °
	3300 mm	2150 mm	150 mm	3855 mm	7 / 5 °
	3600 mm	2300 mm	150 mm	4155 mm	7 / 5 °
	4000 mm	2500 mm	150 mm	4555 mm	7 / 5 °
	4500 mm	2800 mm	150 mm	5055 mm	7 / 5 °
	5000 mm	3050 mm	150 mm	5555 mm	7 / 5 °
Mast tilt / Duplex mast ZZ / hot-rolled	3300 mm	2105 mm	1470 mm	3855 mm	7 / 5 °
	3600 mm	2255 mm	1620 mm	4155 mm	7 / 5 °
	4000 mm	2455 mm	1820 mm	4555 mm	7 / 5 °
Mast tilt / Triplex mast DZ / hot-rolled	4500 mm	2005 mm	1360 mm	5055 mm	7 / 5 °
	4800 mm	2105 mm	1460 mm	5355 mm	7 / 5 °
	5000 mm	2180 mm	1530 mm	5555 mm	7 / 5 °
	5500 mm	2355 mm	1710 mm	6055 mm	7 / 5 °
	6000 mm	2555 mm	1910 mm	6555 mm	7 / 5 °
	6500 mm	2805 mm	2160 mm	7055 mm	7 / 5 °
EFG MB 218k, EFG MB 220	**Lift (h3)**	**Retracted mast height (h1)**	**Free lift (h2)**	**Extended mast height (h4)**	**Forward/ backward tilt of mast**
Mast tilt / Duplex mast ZT / hot-rolled	3000 mm	2000 mm	150 mm	3605 mm	7 / 5 °
	3300 mm	2150 mm	150 mm	3905 mm	7 / 5 °
	3600 mm	2300 mm	150 mm	4205 mm	7 / 5 °
	4000 mm	2500 mm	150 mm	4605 mm	7 / 5 °
	4500 mm	2800 mm	150 mm	5105 mm	7 / 5 °
	5000 mm	3050 mm	150 mm	5605 mm	7 / 5 °
Mast tilt / Duplex mast ZZ / hot-rolled	3300 mm	2105 mm	1470 mm	3935 mm	7 / 5 °
	3600 mm	2255 mm	1620 mm	4235 mm	7 / 5 °
	4000 mm	2455 mm	1820 mm	4635 mm	7 / 5 °
Mast tilt / Triplex mast DZ / hot-rolled	4500 mm	2005 mm	1360 mm	5135 mm	7 / 5 °

	4800 mm	2105 mm	1460 mm	5435 mm	7 / 5 °
	5000 mm	2180 mm	1530 mm	5635 mm	7 / 5 °
	5500 mm	2355 mm	1710 mm	6135 mm	7 / 5 °
	6000 mm	2555 mm	1910 mm	6635 mm	7 / 5 °
	6500 mm	2805 mm	2160 mm	7135 mm	7 / 5 °

VDI table

Characteristic	1.1	Manufacturer (abbreviated description)			Jungheinrich		
	1.2	Manufacturer's type designation			EFG MB 216K	EFG MB 218K	EFG MB 220
	1.3	Drive type			electric		
	1.4	Operation			Seat		
	1.5	Load capacity/load	Q	kg	1600	1800	2000
	1.6	Load centre distance	c	mm	500		
	1.8	Load distance, centre of drive axle to fork	x	mm	352		
	1.9	Wheelbase	y	mm	1357		1465
Weights	2.1.1	Service weight (incl. battery)		kg	3310	3327	3637
	2.2	Axle load laden front/rear		kg	4210 / 700	4490 / 637	4894 / 743
	2.3	Axle load unladen front/rear		kg	1616 / 1694	1564 / 1763	1728 / 1909
Wheels/chassis	3.1	Tyres			Super-elastic (SE)		
	3.2	Tyre size, front			18x7-8	200/50-10	
	3.3	Tyre size, rear			140/55-9		
	3.5	Wheels, number front/back (x=driven)			2x/2		
	3.6	Tread width, front	b10	mm	904	924	
	3.7	Tread width, rear	b11	mm	211		
Basic dimensions	4.1	Forward/backward tilt of mast	a/ß	°	7 / 5		
	4.2	Retracted mast height (h1)	h1	mm	2000		
	4.2.1	Total height	h15	mm	2080		
	4.3	Free lift (h2)	h2	mm	150		
	4.4	Lift (h3)	h3	mm	3000		
	4.5	Extended mast height (h4)	h4	mm	3555	3605	
	4.7	Height of overhead guard (cab)	h6	mm	2080		
	4.8	Seat height/stand height	h7	mm	1030		
	4.12	Coupling height	h10	mm	560		
	4.12.1	2. Coupling height		mm	0		
	4.19	Total length	l1	mm	2899		3007
	4.20	Length including fork shank	l2	mm	1899		2007
	4.21.1	total width	b1	mm	1060	1120	
	4.22	Fork dimensions	s/ e/l	mm	40 x 100 x 1000		
	4.23	Fork carriage connection class			2A		
	4.24	Fork carriage width	b3	mm	980		
	4.31	Ground clearance laden under mast	m1	mm	97		
	4.32	Ground clearance centre of wheelbase	m2	mm	83		
	4.34.1	Aisle width (pallet 1000×1200 sideways)	Ast	mm	3224		3332
	4.34.2	Aisle width (pallet 800x1200 length)	Ast	mm	3348		3456
	4.35	Turning radius	Wa	mm	1545		1653
	4.36	Smallest pivot point distance	b13	mm	0		

Performance data	5.1	Travel speed laden/unladen (Efficiency | drivePLUS)	km/h	16 / 16 | 17 / 17		
	5.2	Lift speed laden/unladen (Efficiency | liftPLUS)	m/s	0.43 / 0.66 | 0.57 / 0.82	0.4 / 0.52 | 0.52 / 0.68	0.38 / 0.52 | 0.5 / 0.68
	5.3	Lowering speed laden/unladen	m/s	0.55 / 0.55		
	5.5	Drawbar pull laden/unladen	N	2150 / 2450	2000 / 2300	1900 / 2300
	5.6	Max. drawbar pull laden/unladen	N	13500 / 13500		
	5.7	Gradeability laden/unladen	%	12 / 20		
	5.8	Max. gradeability laden/unladen	%	24 / 35		22 / 35
	5.9	Acceleration time laden/unladen (Efficiency | drivePLUS)	s	5.2 / 4.9 | 5.2 / 4.8	5.1 / 4.7 | 5 / 4.6	5 / 4.6 | 5 / 4.5
	5.10	Service brake		mechanical/hydraulic		
Electric motor/electronics	6.1	Drive motor, performance S2 60 min	kW	4.6		
	6.1.1	2. Drive motor, performance S2 60 min	kW	4.6		
	6.2	Lift motor, performance with S3	kW	15.5		
	6.3	Battery according to DIN 43531/35/36		DIN 43531 A		
	6.4	Battery voltage/nominal capacity	V / Ah	48 / 625		48 / 750
	6.5	Battery weight	kg	856		1013
	6.6.1	Energy consumption according to EN cycle (Efficiency | PLUS)	kWh/h	4.8 | 4.71	4.87 | 4.83	4.94 | 4.94
	6.6.2	CO2 equivalent according to EN ISO 23308 (Efficiency | PLUS)	kg/h	2.59 | 2.5	2.63 | 2.6	2.67 | 2.6
	6.7	Throughput (Efficiency | PLUS)	t/h	118 | 121	130 | 133	141 | 145
	6.8.1	Energy consumption with max. throughput (Efficiency | PLUS)	kWh/h	6.39 | 6.44	6.82 | 6.86	7.24 | 7.27
Other	8.1	Type of drive control		Impulse/AC		
	10.1	Operating pressure for attachment	bar	230		
	10.2	Oil flow for attachments	l/min	22		
	10.7	Sound pressure level according to EN12053	dB (A)	72		
	10.8	Trailer coupling, model/type DIN		Bolts		

- This data sheet according to VDI guideline 2198 only states the technical values of the standard truck. Different tyres, other masts, additional equipment etc. may result in different values.