

Electric tow tractor

EZS MB 230

Towing capacity: 3000 kg

LI-ION technology

EZS MB 230

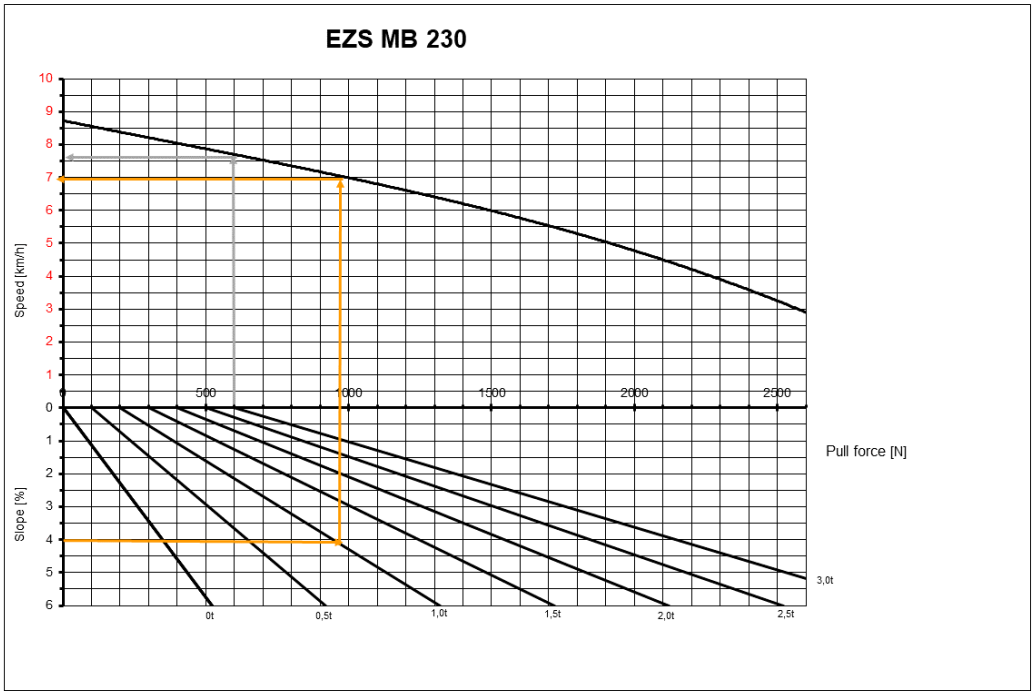
EZS MB 230
Speed [km/h]
Slope [%]
Pull force [N]
0
500
1000
1500
2000
2500
0t
0,5t
1,0t
1,5t
2,0t
2,5t
3,0t

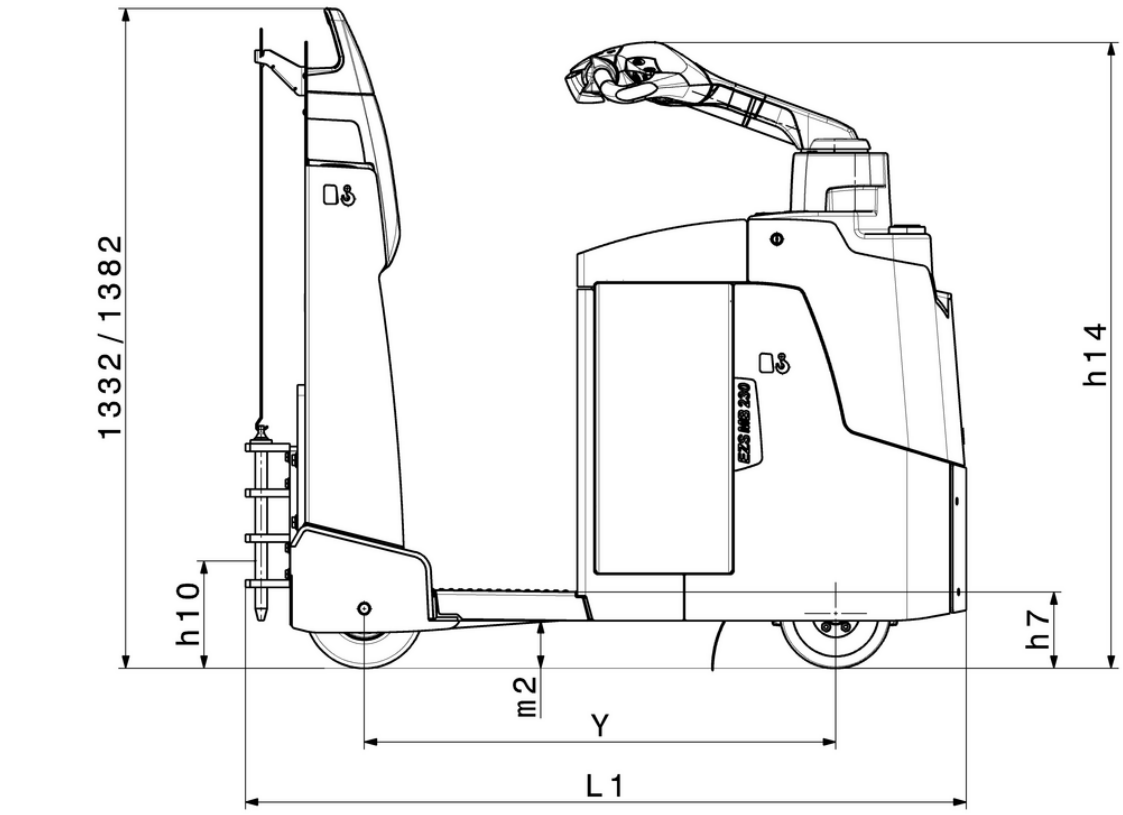
1332/1382
h14
h10
h7
m2
Y
L1

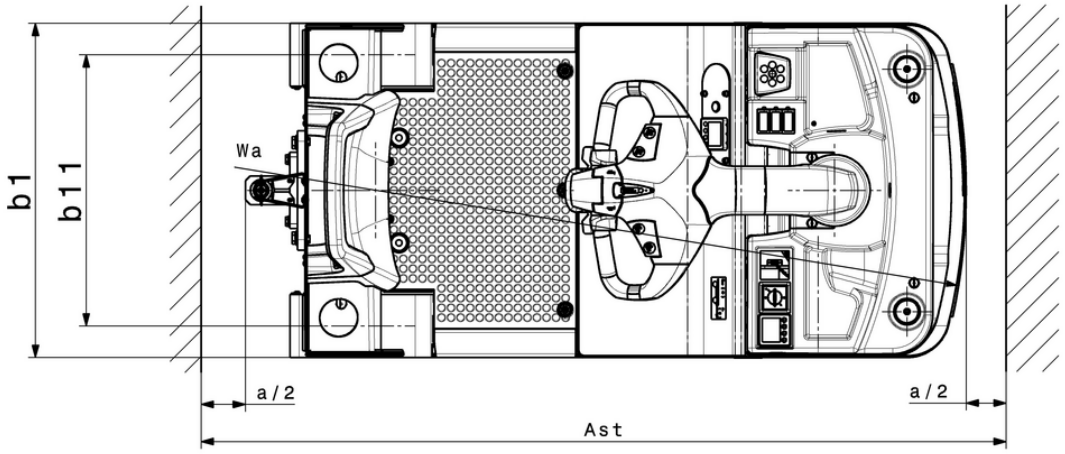
b1
b11
Wa
a/2
a/2
Ast

VDI table

Characteristic	1.1	Manufacturer (abbreviated description)			Jungheinrich
	1.2	Manufacturer's type designation			EZS MB
	1.3	Drive type			electric
	1.4	Operation			Stand-on
	1.5.3	Towing capacity	Q	kg	3000
	1.7	Rated drawbar pull		N	750
	1.9	Wheelbase	y	mm	985
Weights	2.1.1	Service weight (incl. battery)		kg	801
	2.3	Axle load unladen front/rear		kg	431 / 370
Wheels/chassis	3.1	Tyres			Polyurethane / Super-elastic
	3.2	Tyre size, front			Ø 230 x 70
	3.3	Tyre size, rear			Ø 250 x 80
	3.4	Additional wheels			1 x / 2
	3.7	Tread width, rear	b11	mm	568
Basic dimensions	4.8	Seat height/stand height	h7	mm	118
	4.9	Height of tiller handle in drive position min./max.	h14	mm	1262 / 1262
	4.12	Coupling height	h10	mm	175
	4.19	Total length	l1	mm	1520
	4.21.1	total width	b1	mm	700
	4.32	Ground clearance centre of wheelbase	m2	mm	50
	4.35	Turning radius	Wa	mm	1261
Performance data	5.1	Travel speed laden/unladen		km/h	7.5 / 8.5
	5.5	Drawbar pull laden/unladen		N / -	750 / -
	5.6	Max. drawbar pull laden/unladen		N	2600 / 2600
	5.10	Service brake			generative
Electric motor/electronics	6.1	Drive motor, performance S2 60 min		kW	1.6
	6.4	Battery voltage/nominal capacity		V / Ah	24 / 250
	6.5	Battery weight		kg	212
	6.6.1	Energy consumption according to EN cycle		kWh/h	1.16
	6.6.2	CO2 equivalent according to EN ISO 23308		kg/h	0.63

	8.1	Type of drive control		AC
Other	10.7	Sound pressure level according to EN12053	dB (A)	60

- This data sheet according to VDI guideline 2198 only states the technical values of the standard truck. Different tyres, other masts, additional equipment etc. may result in different values.