

Electric pedestrian pallet truck

EJE 114i–120i

Lift height: 122 mm / Load capacity: 1400-2000 kg

LI-ION technology

JUNGHEINRICH

EJE 114i–120i

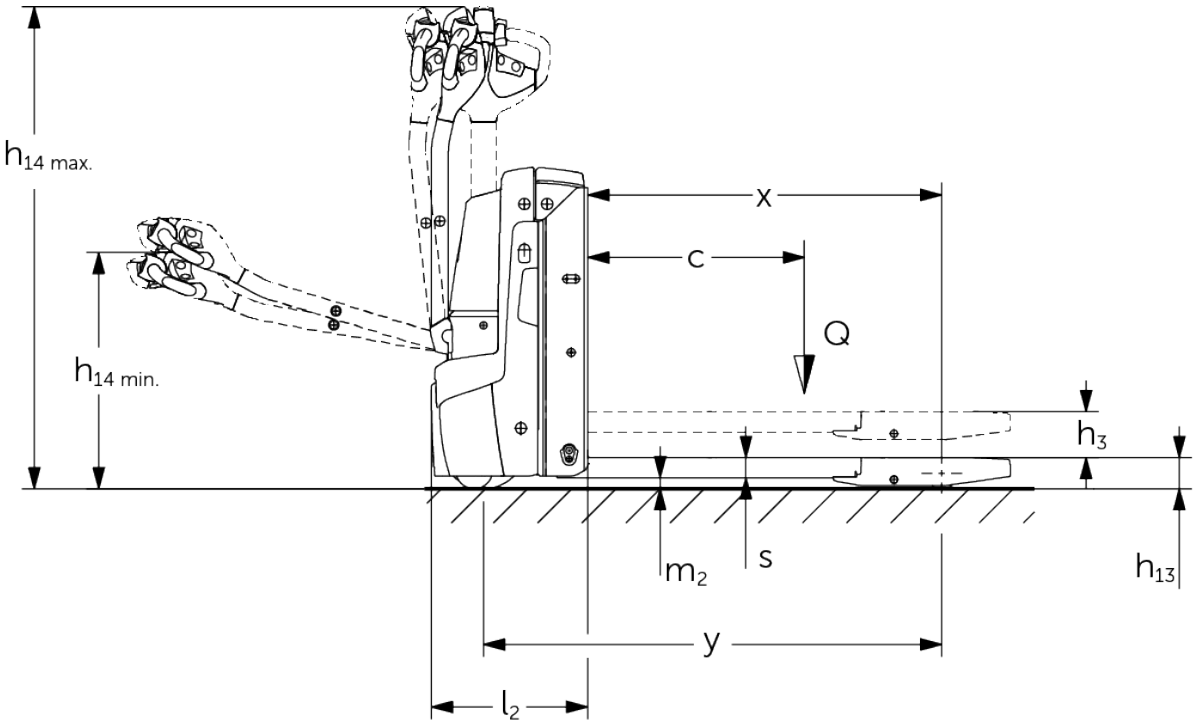

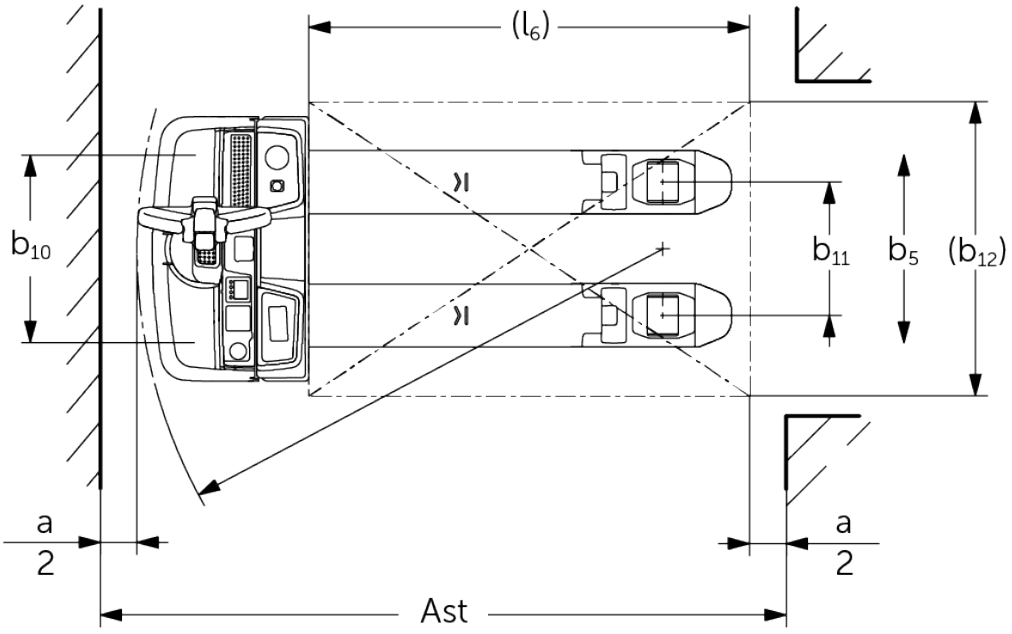

VDI table

Characteristic	1.1	Manufacturer (abbreviated description)			Jungheinrich			
	1.2	Manufacturer's type designation			EJE 1i			
	1.3	Drive			electric			
	1.4	Operation			Pedestrian			
	1.5	Load capacity/load	Q	kg	1400	1600	1800	2000
	1.6	Load centre distance	c	mm	600			
	1.8	Load distance, centre of drive axle to fork	x	mm	897			
	1.9	Wheelbase	y	mm	1180			
Weights	2.1.1	Service weight (incl. battery)		kg	311	315		
	2.2	Axle load laden front/rear		kg	685 / 1026	757 / 1158	772 / 1343	776 / 1539
	2.3	Axle load unladen front/rear		kg	244 / 67	246 / 69		
Wheels/suspension system	3.1	Tyres			Polyurethane (PU)			
	3.2	Tyre size, front			Ø 230 x 70			
	3.3	Tyre size, rear			Ø 85 x 95	Ø 85 x 110		
	3.4	Additional wheels			Ø 100 x 40			
	3.5	Wheels, number front/back (x=driven)			1x + 2 / 2			
	3.6	Tread width, front	b10	mm	510			
	3.7	Tread width, rear	b11	mm	363			
Basic dimensions	4.4	Lift (h3)	h3	mm	122			
	4.9	Height of tiller handle in drive position min./max.	h14	mm	690 / 1235			
	4.15	Height, lowered	h13	mm	85			
	4.19	total length	l1	mm	1575			
	4.20	Length including fork shank	l2	mm	425			
	4.21.1	total width	b1	mm	720			
	4.22	Fork dimensions	s/e/l	mm	55 x 150 x 1150	55 x 172 x 1150		
	4.25	Width across forks	b5	mm	513	535		
	4.32	Ground clearance centre of wheelbase	m2	mm	30			
	4.34.1	Aisle width (pallet 1000×1200 sideways)	Ast	mm	2173			
	4.34.2	Aisle width (pallet 800x1200 length)	Ast	mm	2066			
	4.35	Turning radius	Wa	mm	1364			
Performance data	5.1	Travel speed laden/unladen		km/h	5 / 5	6 / 6		
	5.2	Lift speed laden/unladen		m/s	0.03 / 0.03	0.05 / 0.06		
	5.3	Lowering speed laden/unladen		m/s	0.05 / 0.02	0.06 / 0.05		
	5.8	Max. gradeability laden/unladen		%	8 / 20	10 / 20		
	5.10	Service brake			generative			

E-motor/Electronics	6.1	Drive motor, performance S2 60 min	kW	0.9	1.1		
	6.2	Lift motor, performance with S3	kW	1.2			
	6.3	Battery according to DIN 43531/35/36		no			
	6.4	Battery voltage/nominal capacity	V / Ah	25.6 / 50			
	6.5	Battery weight	kg	23.8			
	6.6.1	Energy consumption according to EN cycle	kWh/h	0.3	0.31	0.33	0.35
	6.6.2	CO2 equivalent according to EN ISO 23308	kg/h	0.16	0.17	0.18	0.19
	6.7	Throughput	t/h	59	101	117	129
Other	8.1	Type of drive control		AC			
	10.7	Sound pressure level according to EN12053	dB (A)	61	58		

- This data sheet according to VDI guideline 2198 only states the technical values of the standard truck. Different tyres, other masts, additional equipment etc. may result in different values.

The specified values refer to the XS battery compartment with 50-Ah battery and raised load section.

- VDI no. 1.8: lowered load section: x + 67 mm.
- VDI no. 1.9: with S battery compartment: y + 50 mm; load section: y + 67 mm.
- VDI no. 3.3: applies for single load wheel; EJE 114i: with tandem: Ø 82 x 70; with triplex: Ø 82 x 35; EJE 116i - 120i: with tandem: Ø 82 x 85; with triplex: Ø 82 x 42.
- VDI no. 4.15: with tandem rollers and triplex rollers h13 is = 83 mm.
- VDI no. 4.19: with S battery compartment: l1 + 50 mm.
- VDI no. 4.20: with S battery compartment: l2 + 50 mm.
- VDI no. 4.34.1: with S battery compartment: aisle width + 50 mm.
- VDI no. 4.34.2: with S battery compartment: aisle width + 50 mm.
- VDI no. 4.35: with S battery compartment: Wa + 50 mm; load section lowered: Wa + 67 mm.
- VDI no. 6.2: lift motor, performance with 4.5% ED.

The German production facilities in Norderstedt, Moosburg and Landsberg are certified as well as our Genuine Parts Center in Kaltenkirchen.

ISO 9001
ISO 14001

Jungheinrich fork lift trucks meet European safety requirements.

CE

JUNGHEINRICH