

Electric reach truck

ETV 214i–216i

Lift height: 4550-10700 mm / Load capacity: 1400-1600 kg

LI-ION technology

JUNGHEINRICH

ETV 214i–216i

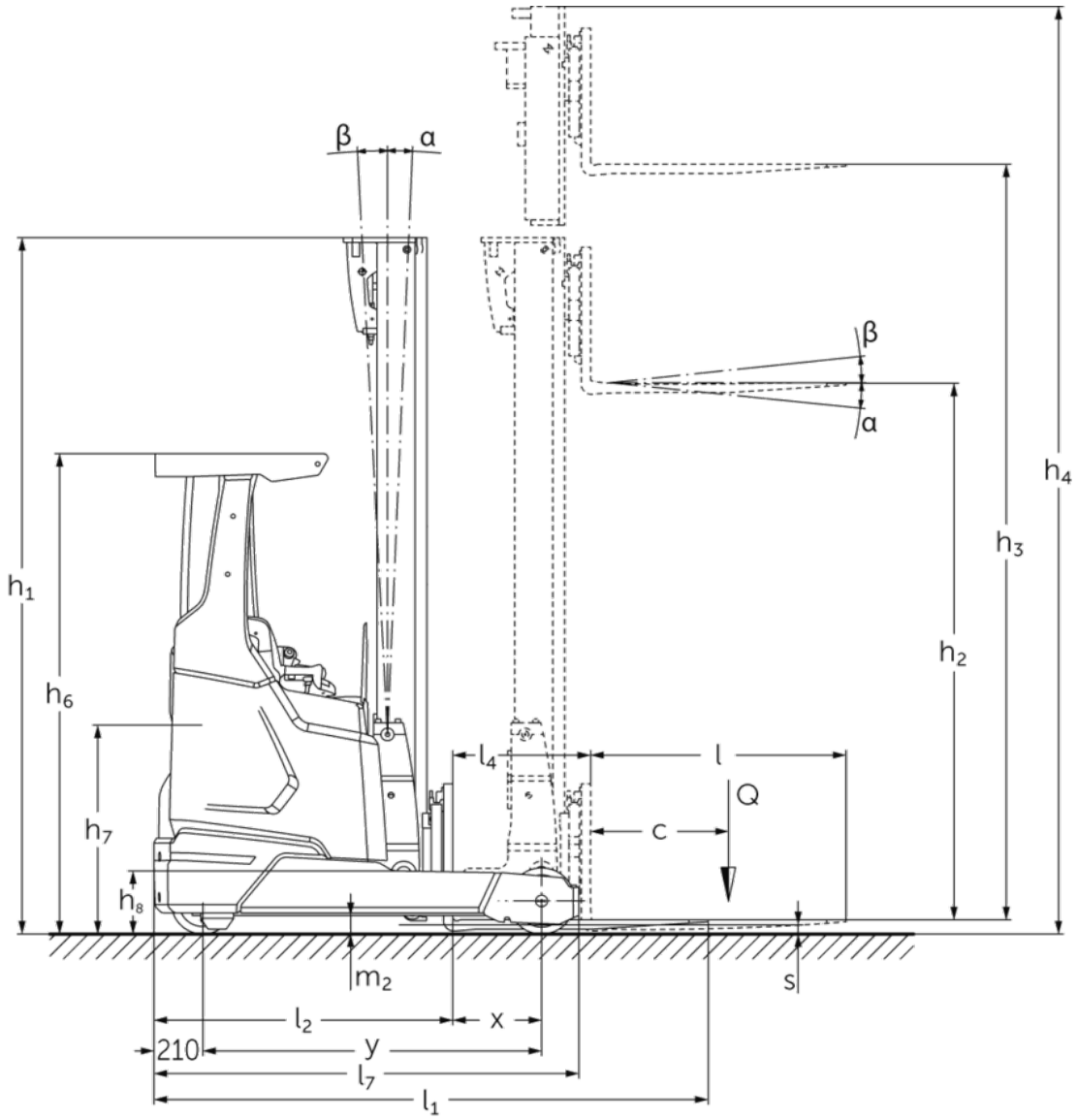

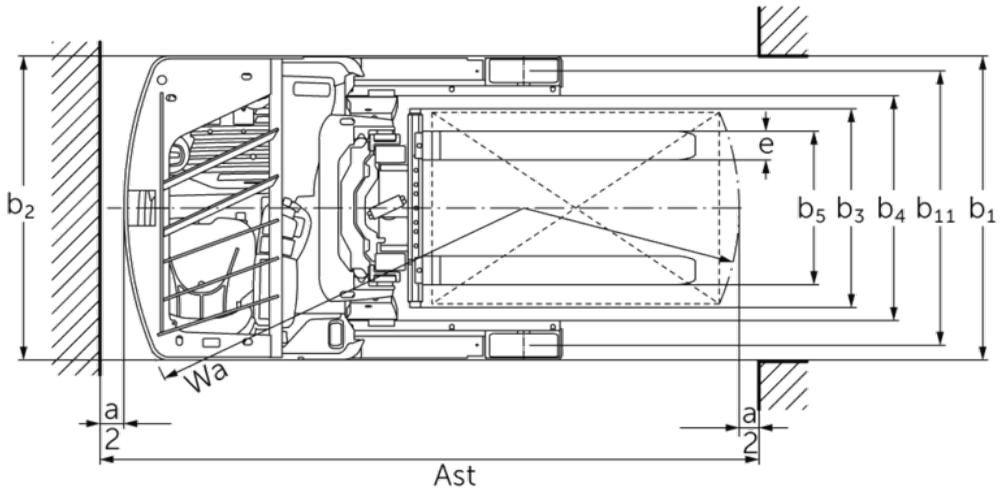

ETV 214i–216i

ETV 214i, ETV 216i	Lift (h3)	Retracted mast height (h1)	Free lift (h2)	Extended mast height (h4)	Forward/ backward tilt of mast	Forward/ backward tilt of fork carriage
Fork tilt / Triplex mast DZ-V / cold-formed	5000 mm	2200 mm	1546 mm	5654 mm		2 / 5 °
	5300 mm	2300 mm	1646 mm	5954 mm		2 / 5 °
	5600 mm	2400 mm	1746 mm	6254 mm		2 / 5 °
	5900 mm	2500 mm	1846 mm	6554 mm		2 / 5 °
	6200 mm	2600 mm	1946 mm	6854 mm		2 / 5 °
	6500 mm	2700 mm	2046 mm	7154 mm		2 / 5 °
	6800 mm	2800 mm	2146 mm	7454 mm		2 / 5 °
	7100 mm	2900 mm	2246 mm	7754 mm		2 / 5 °
	7400 mm	3000 mm	2346 mm	8054 mm		2 / 5 °
	7700 mm	3100 mm	2446 mm	8354 mm		2 / 5 °
	8000 mm	3200 mm	2546 mm	8654 mm		2 / 5 °
	8300 mm	3300 mm	2646 mm	8954 mm		2 / 5 °
	8420 mm	3340 mm	2686 mm	9074 mm		2 / 5 °
	8720 mm	3440 mm	2786 mm	9374 mm		2 / 5 °
	9020 mm	3540 mm	2886 mm	9674 mm		2 / 5 °
	9410 mm	3670 mm	3016 mm	10064 mm		2 / 5 °
	9920 mm	3840 mm	3186 mm	10574 mm		2 / 5 °
	10250 mm	3950 mm	3296 mm	10904 mm		2 / 5 °
	10520 mm	4040 mm	3386 mm	11174 mm		2 / 5 °
	10700 mm	4100 mm	3446 mm	11354 mm		2 / 5 °
Mast tilt / Triplex mast DZ-V / cold-formed	6500 mm	2700 mm	2046 mm	7154 mm	0.5 / 2 °	
	6800 mm	2800 mm	2146 mm	7454 mm	0.5 / 2 °	
	7100 mm	2900 mm	2246 mm	7754 mm	0.5 / 2 °	
	7310 mm	2970 mm	2316 mm	7964 mm	0.5 / 1 °	
	7400 mm	3000 mm	2346 mm	8054 mm	0.5 / 1 °	
	7700 mm	3100 mm	2446 mm	8354 mm	0.5 / 1 °	
	8000 mm	3200 mm	2546 mm	8654 mm	0.5 / 1 °	
	8300 mm	3300 mm	2646 mm	8954 mm	0.5 / 1 °	

	8420 mm	3340 mm	2686 mm	9074 mm	0.5 / 1 °
	8720 mm	3440 mm	2786 mm	9374 mm	0.5 / 1 °
	9020 mm	3540 mm	2886 mm	9674 mm	0.5 / 1 °
Mast tilt / Triplex mast DZ / hot-rolled	4550 mm	2050 mm	1396 mm	5204 mm	1 / 5 °
	5000 mm	2200 mm	1546 mm	5654 mm	1 / 5 °
	5240 mm	2280 mm	1626 mm	5894 mm	1 / 5 °
	5300 mm	2300 mm	1646 mm	5954 mm	1 / 5 °
	5450 mm	2350 mm	1696 mm	6104 mm	1 / 3 °
	5600 mm	2400 mm	1746 mm	6254 mm	1 / 3 °
	5720 mm	2440 mm	1786 mm	6374 mm	1 / 3 °
	5900 mm	2500 mm	1846 mm	6554 mm	1 / 3 °
	6200 mm	2600 mm	1946 mm	6854 mm	1 / 3 °
	6500 mm	2700 mm	2046 mm	7154 mm	0.5 / 2 °
	6800 mm	2800 mm	2146 mm	7454 mm	0.5 / 2 °
	7100 mm	2900 mm	2246 mm	7754 mm	0.5 / 2 °
	7310 mm	2970 mm	2316 mm	7964 mm	0.5 / 1 °
	7400 mm	3000 mm	2346 mm	8054 mm	0.5 / 1 °

VDI table

Characteristic	1.1	Manufacturer (abbreviated description)			Jungheinrich	
	1.2	Manufacturer's type designation			ETV 214i	ETV 216i
	1.3	Drive			electric	
	1.4	Operation			Sideways-seated	
	1.5	Load capacity/load	Q	kg	1400	1600
	1.6	Load centre distance	c	mm	600	
	1.8	Load distance, centre of drive axle to fork	x	mm	433	383
	1.8.1	Load distance, centre of drive axle to fork, mast extended		mm	205	
	1.9	Wheelbase	y	mm	1410	1460
Weights	2.1.1	Service weight (incl. battery)		kg	2828	2850
	2.3	Axle load unladen front/rear		kg	1805 / 1023	1815 / 1035
	2.4	Axle load fork forward laden front/rear		kg	494 / 3734	503 / 3947
	2.5	Axle load fork back laden front/rear		kg	1586 / 2642	1594 / 2856
Wheels/suspension system	3.1	Tyres			Polyurethane (PU)	
	3.2	Tyre size, front			Ø 270 x 114	
	3.3	Tyre size, rear			Ø 285 x 100	
	3.5	Wheels, number front/back (x=driven)			1x / 2	
	3.7	Tread width, rear	b11	mm	1148	
Basic dimensions	4.1	Forward/backward tilt of mast	a/ß	°	1 / 3	
	4.2	Retracted mast height (h1)	h1	mm	2300	
	4.3	Free lift (h2)	h2	mm	1656	
	4.4	Lift (h3)	h3	mm	5300	
	4.5	Extended mast height (h4)	h4	mm	5944	
	4.7	Height of overhead guard (cab)	h6	mm	2072	
	4.8	Seat height/stand height	h7	mm	947	
	4.10	Height of support arms	h8	mm	272	
	4.19	total length	l1	mm	2287	2437
	4.20	Length including fork shank	l2	mm	1187	1287
	4.21.1	total width	b1	mm	1270	
	4.21.2	total width	b2	mm	1270	
	4.22	Fork dimensions	s/e/l	mm	40 x 120 x 1150	
	4.23	Fork carriage connection class			2B	
	4.24	Fork carriage width	b3	mm	830	
	4.25	Width across forks	b5	mm	335	
	4.25.1	Width across forks (min./max.)	b5	mm	335 / 730	
	4.26	Width between support arms/loading areas	b4	mm	940	
	4.28	Reach distance		mm	638	588
	4.32	Ground clearance centre of wheelbase	m2	mm	75	
	4.34.1	Aisle width (pallet 1000×1200 sideways)	Ast	mm	2646	2731
	4.34.2	Aisle width (pallet 800x1200 length)	Ast	mm	2685	2780
	4.35	Turning radius	Wa	mm	1620	1670
	4.37	Length over the support arms	L7	mm	1780	1830

Performance data	5.1	Travel speed laden/unladen	km/h	11 / 11	
	5.2	Lift speed laden/unladen	m/s	0.4 / 0.68	0.38 / 0.68
	5.3	Lowering speed laden/unladen	m/s	0.55 / 0.52	
	5.4	Reach speed laden/unladen	m/s	0.2 / 0.2	
	5.7	Gradeability laden/unladen	%	7 / 10	
	5.8	Max. gradeability laden/unladen	%	10 / 15	
	5.9	Acceleration time laden/unladen	s	5.2 / 4.8	
	5.10	Service brake		electric	
E-motor/Electronics	6.1	Drive motor, performance S2 60 min	kW	7.5	
	6.2	Lift motor, performance with S3	kW	10.5	
	6.3	Battery according to DIN 43531/35/36		Jungheinrich Li-ion	
	6.4	Battery voltage/nominal capacity	V / Ah	51.2 / 230	
	6.5	Battery weight	kg	106	190
	6.6.1	Energy consumption according to EN cycle	kWh/h	2.9	
	6.6.2	CO2 equivalent according to EN ISO 23308	kg/h	1.57	
	6.7	Throughput	t/h	49	57
	6.8	Turnover efficiency according to VDI 2198	t/kWh	18.8	21.1
	6.8.1	Energy consumption with max. throughput	kWh/h	2.6	2.7
Other	8.1	Type of drive control		3-phase AC	
	10.1	Operating pressure for attachment	bar	150	
	10.2	Oil flow for attachments	l/min	20	
	10.7	Sound pressure level according to EN12053	dB (A)	67	65

- This data sheet according to VDI guideline 2198 only states the technical values of the standard truck. Different tyres, other masts, additional equipment etc. may result in different values.

The German production facilities in Norderstedt, Moosburg and Landsberg are certified as well as our Genuine Parts Center in Kaltenkirchen.

ISO 9001
ISO 14001

Jungheinrich fork lift trucks meet European safety requirements.

CE

JUNGHEINRICH