

Electric 4-wheel forklift truck

EFG 425–435

Lift height: 2900-7500 mm / Load capacity: 2500-3500 kg

LI-ION technology

JUNGHEINRICH

EFG 425–435

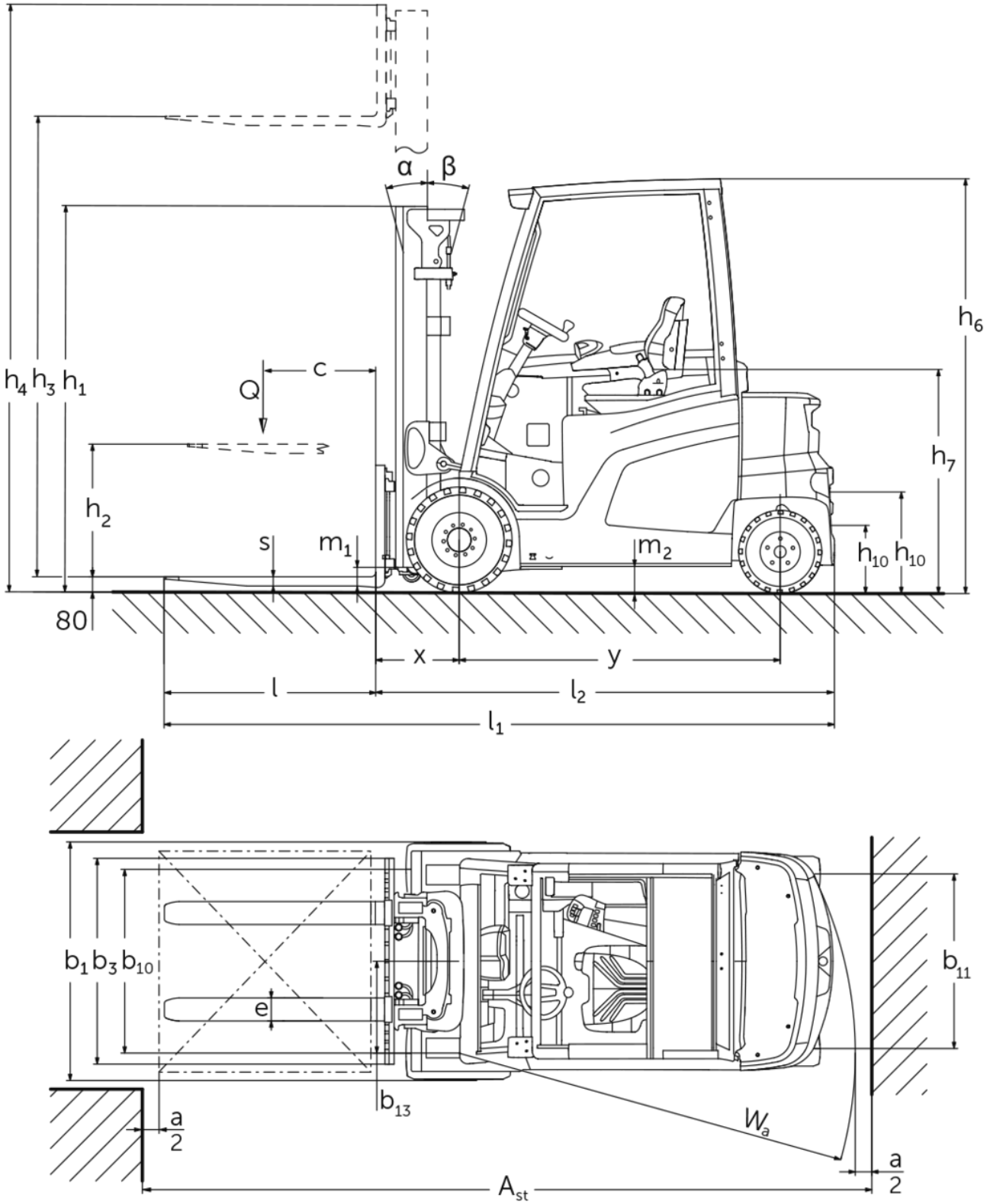
α
β
h6
h4 h3 h1
Q
c
h7
h2
s
m1
m2
h10 h10
80
x
y
l
l2
l1
b1 b3 b10
e
b11
b13
Wa
a/2
a/2
Ast

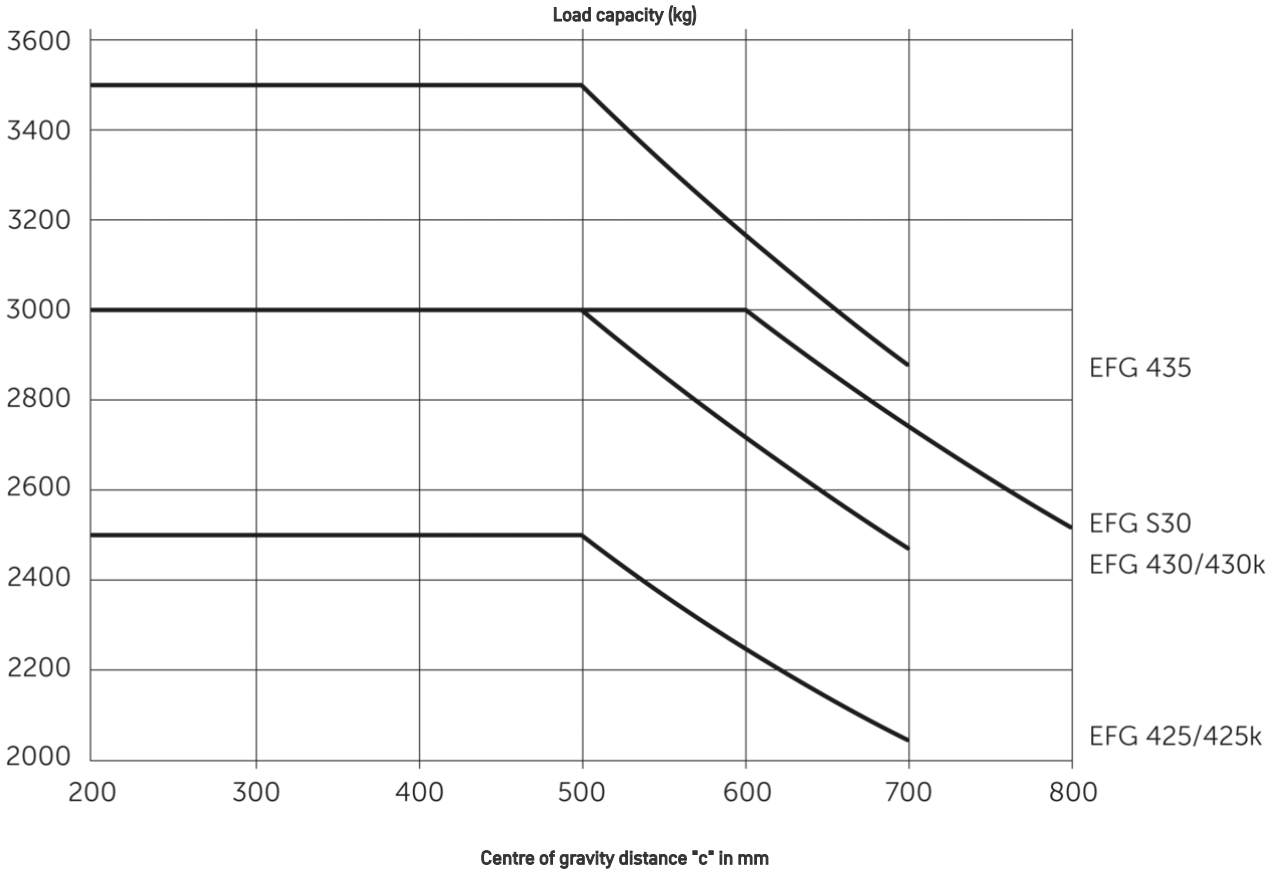
Load capacity (kg)
3600
3400
3200
3000
2800
2600
2400
2200
2000
200
300
400
500
600
700
800
EFG 435
EFG S30
EFG 430/430k
EFG 425/425k
Centre of gravity distance "c" in mm

EFG 425–435

EFG 425k, EFG 425	Lift (h3)	Retracted mast height (h1)	Free lift (h2)	Extended mast height (h4)	Forward/ backward tilt of mast
Duplex mast ZT	2900 mm	2125 mm	150 mm	3500 mm	6 / 8 °
	3100 mm	2225 mm	150 mm	3700 mm	6 / 8 °
Duplex mast ZZ	3100 mm	2190 mm	1600 mm	3690 mm	6 / 8 °
Triplex mast DZ	4400 mm	2090 mm	1500 mm	4990 mm	6 / 8 °
	4700 mm	2190 mm	1600 mm	5290 mm	6 / 8 °
EFG 430k, EFG 430, EFG S30	**Lift (h3)**	**Retracted mast height (h1)**	**Free lift (h2)**	**Extended mast height (h4)**	**Forward/ backward tilt of mast**
Duplex mast ZT	2900 mm	2122 mm	150 mm	3657 mm	6 / 8 °
Duplex mast ZZ	3100 mm	2187 mm	1450 mm	3837 mm	6 / 8 °
Triplex mast DZ	4400 mm	2087 mm	1350 mm	5137 mm	6 / 8 °
	4700 mm	2187 mm	1450 mm	5437 mm	6 / 8 °
EFG 435	**Lift (h3)**	**Retracted mast height (h1)**	**Free lift (h2)**	**Extended mast height (h4)**	**Forward/ backward tilt of mast**
Duplex mast ZT	2900 mm	2152 mm	150 mm	3686 mm	6 / 8 °
	3100 mm	2252 mm	150 mm	3886 mm	6 / 8 °
Duplex mast ZZ	3100 mm	2217 mm	1451 mm	3866 mm	6 / 8 °
Triplex mast DZ	4400 mm	2117 mm	1351 mm	5166 mm	6 / 8 °
	4700 mm	2217 mm	1451 mm	5466 mm	6 / 8 °

Please note:
The values specified for the standard truck were determined using Continental tyres. Different tyres on the standard truck may result in different values.

VDI table

Characteristic	1.1	Manufacturer (abbreviated description)			Jungheinrich						
	1.2	Manufacturer's type designation			EFG 425k	EFG 425	EFG 430k	EFG 430	EFG S30	EFG 435	
	1.3	Drive			electric						
	1.4	Operation			Seat						
	1.5	Load capacity/load	Q	kg	2500		3000			3500	
	1.6	Load centre distance	c	mm	500				600	500	
	1.8	Load distance, centre of drive axle to fork	x	mm	442		447				
	1.9	Wheelbase	y	mm	1595	1740	1595	1745			
Weights	2.1.1	Service weight (incl. battery)		kg	4691	4642	5298	5143	5435	5664	
	2.2	Axle load laden front/rear		kg	6414 / 776	6466 / 676	7404 / 895	7395 / 748	7605 / 829	8239 / 926	
	2.3	Axle load unladen front/rear		kg	2419 / 2272	2595 / 2047	2594 / 2704	2741 / 2402	2771 / 2664	2805 / 2859	
Wheels/suspension system	3.1	Tyres			Super-elastic (SE)						
	3.2	Tyre size, front			225/75-10		250/60-12		315/45-12		
	3.3	Tyre size, rear			180/70-8		200/50-10	180/70-8	200/50-10		
	3.5	Wheels, number front/back (x=driven)			2x / 2						
	3.6	Tread width, front	b10	mm	990		950		1000		
	3.7	Tread width, rear	b11	mm	940					950	
Basic dimensions	4.1	Forward/backward tilt of mast	a/ß	°	6 / 8						
	4.2	Retracted mast height (h1)	h1	mm	2325		2322			2352	
	4.3	Free lift (h2)	h2	mm	150						
	4.4	Lift (h3)	h3	mm	3300						
	4.5	Extended mast height (h4)	h4	mm	3900		4057			4086	
	4.7	Height of overhead guard (cab)	h6	mm	2240						
	4.8	Seat height/stand height	h7	mm	1226						
	4.12	Coupling height	h10	mm	380						
	4.12.1	2. Coupling height		mm	530						
	4.19	total length	l1	mm	3484	3632	3489	3637			
	4.20	Length including fork shank	l2	mm	2334	2482	2339	2487			
	4.21.1	total width	b1	mm	1200				1300		
	4.22	Fork dimensions	s/e/l	mm	40 x 100 x 1150		45 x 125 x 1150				
	4.23	Fork carriage connection class			2A		3A				
	4.24	Fork carriage width	b3	mm	1120						
	4.31	Ground clearance laden under mast	m1	mm	110						
	4.32	Ground clearance centre of wheelbase	m2	mm	135						
	4.34.1	Aisle width (pallet 1000×1200 sideways)	Ast	mm	3722	3872	3727	3877			
	4.34.2	Aisle width (pallet 800x1200 length)	Ast	mm	3922	4072	3927	4077			
	4.35	Turning radius	Wa	mm	2080	2230	2080	2230			
	4.36	Smallest pivot point distance	b13	mm	580	630	580	630			

Performance data	5.1	Travel speed laden/unladen (Efficiency | drivePLUS)	km/h	17 / 17 | 20 / 20				
	5.2	Lift speed laden/unladen (Efficiency | liftPLUS)	m/s	0.58 / 0.62 | 0.64 / 0.68		0.5 / 0.52 | 0.57 / 0.63		0.44 / 0.51 | 0.5 / 0.53
	5.3	Lowering speed laden/unladen (Efficiency | liftPLUS)	m/s	0.59 / 0.62 | 0.59 / 0.62		0.58 / 0.64 | 0.58 / 0.64		0.56 / 0.59 | 0.56 / 0.59
	5.5	Drawbar pull laden/unladen (Efficiency | drivePLUS)	N	8000 / 8000 | 10000 / 10000		7000 / 7000 | 10000 / 10000		
	5.6	Max. drawbar pull laden/unladen (Efficiency | drivePLUS)	N	16000 / 16000 | 19500 / 18600		16000 / 16000 | 19500 / 19500		
	5.7	Gradeability laden/unladen (Efficiency | drivePLUS)	%	12 / 18 | 19 / 30		10 / 15 | 16 / 25		10 / 15 | 14 / 23
	5.8	Max. gradeability laden/unladen (Efficiency | drivePLUS)	%	18 / 28 | 27 / 34	18 / 28 | 27 / 38	18 / 28 | 22 / 33		17 / 28 | 20 / 33
	5.9	Acceleration time laden/unladen (Efficiency | drivePLUS)	s	6.1 / 5.7 | 5.3 / 5		6.1 / 5.4 | 5.5 / 5		6.4 / 5.5 | 5.6 / 5.1
	5.10	Service brake		Friction brake (hydraulically operated)				
E-motor/Electronics	6.1	Drive motor, performance S2 60 min (Efficiency | drivePLUS)	kW	8.9 | 11.3				
	6.1.1	2. Drive motor, performance S2 60 min (Efficiency | drivePLUS)	kW	8.9 | 11.3				
	6.2	Lift motor, performance with S3 (Efficiency | liftPLUS)	kW	19.5 | 22				
	6.3	Battery according to DIN 43531/35/36		DIN 43536 A				
	6.4	Battery voltage/nominal capacity	V / Ah	80 / 620	80 / 775	80 / 620	80 / 775	
	6.5	Battery weight	kg	1558	1863	1558	1863	
	6.6.1	Energy consumption according to EN cycle (Efficiency | PLUS)	kWh/h	6.2 | 6.2		7.2 | 7.2	7.1 | 7.1	7.4 | 7.4 | 8.1 | 8.3
	6.6.2	CO2 equivalent according to EN ISO 23308 (Efficiency | PLUS)	kg/h	3.35 | 3.4		3.89 | 3.9	3.84 | 3.8	4 | 4 | 4.38 | 4.5
	6.7	Throughput (Efficiency | PLUS)	t/h	173 | 188		204 | 219		201 | 219 | 224 | 238
	6.8	Turnover efficiency according to VDI 2198 (Efficiency | PLUS)	t/kWh	22.2 | 20		22.9 | 21.3		22.8 | 21.3 | 24.3 | 22.2
	6.8.1	Energy consumption with max. throughput (Efficiency | PLUS)	kWh/h	7.8 | 9.4		8.9 | 10.3		8.8 | 10.3 | 9.2 | 10.7
Other	8.1	Type of drive control		Impulse/AC				
	10.1	Operating pressure for attachment	bar	240				
	10.2	Oil flow for attachments	l/min	45				
	10.7	Sound pressure level according to EN12053	dB (A)	69				
	10.8	Trailer coupling, model/type DIN		DIN 15170 H				

- This data sheet according to VDI guideline 2198 only states the technical values of the standard truck. Different tyres, other masts, additional equipment etc. may result in different values.

The German production facilities in Norderstedt, Moosburg and Landsberg are certified as well as our Genuine Parts Center in Kaltenkirchen.

ISO 9001
ISO 14001

Jungheinrich fork lift trucks meet European safety requirements.

CE

JUNGHEINRICH