

Electric 4-wheel forklift truck

EFG 540k–S50

LI-ION technology

JUNGHEINRICH

EFG 540k–S50

EFG 540k – 550

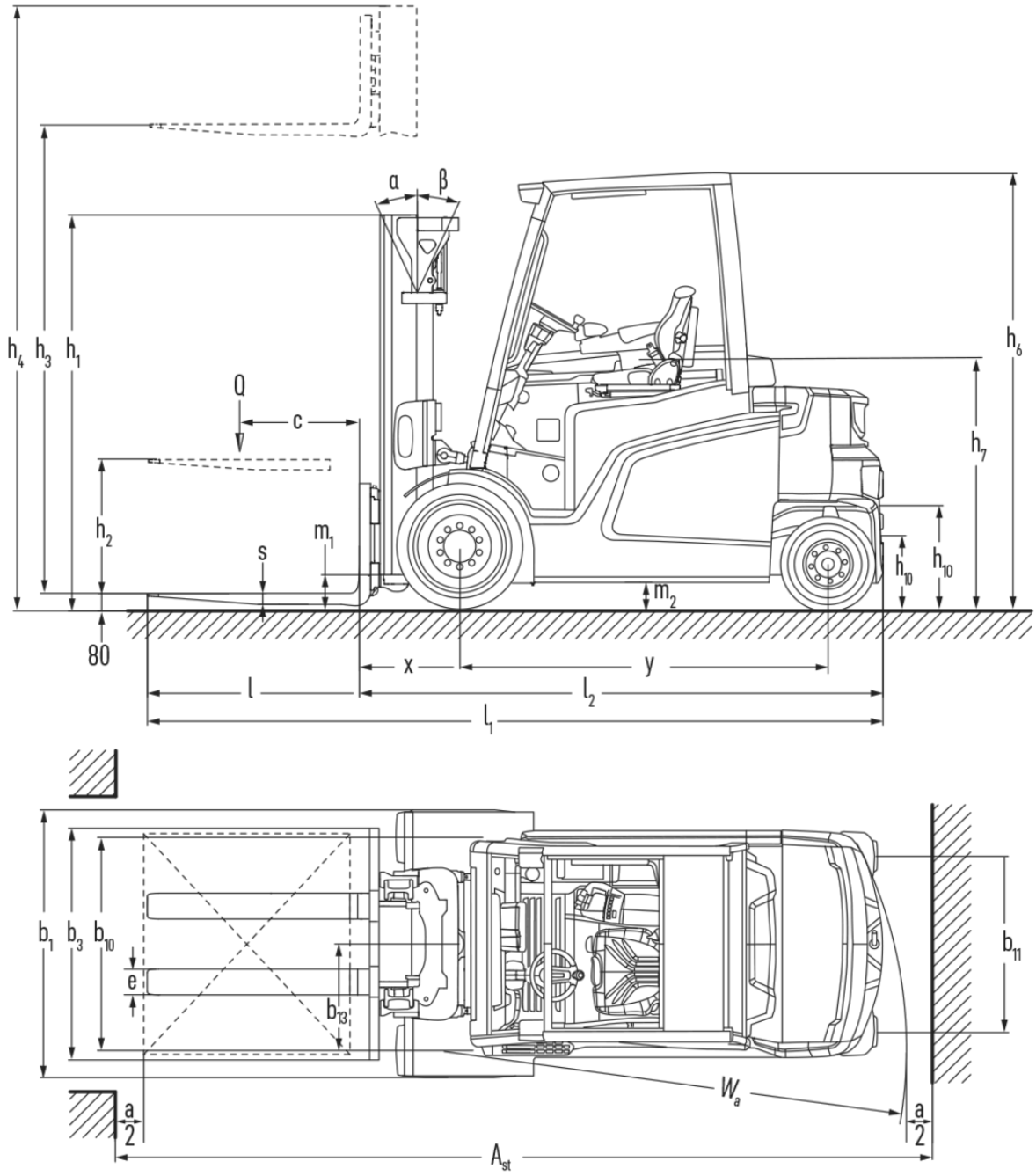

EFG S50

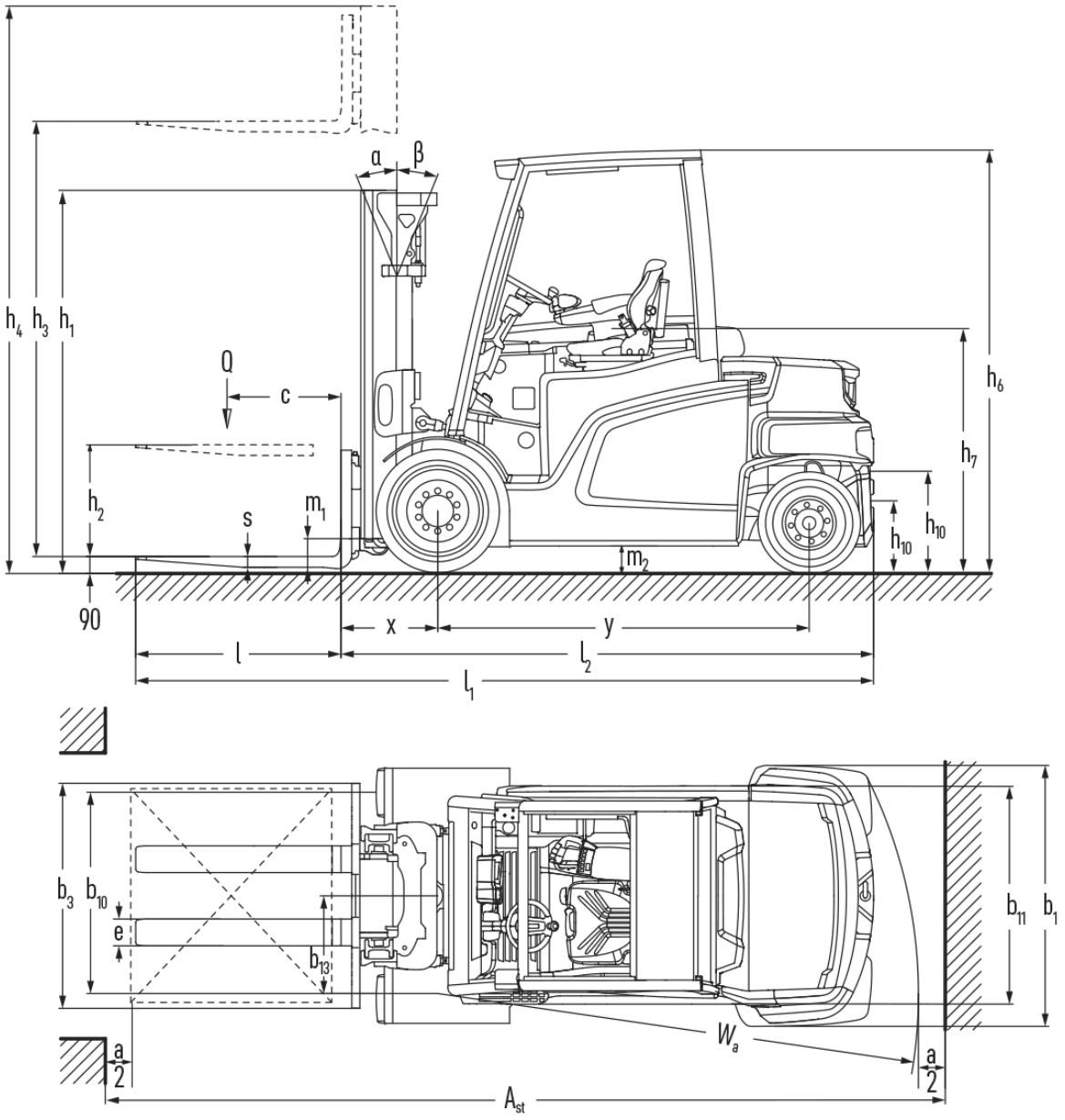
α
β
h4
h3
h1
Q
c
h2
s
m1
m2
h6
h7
h10
h10
90
x
y
l
l2
l1

b3
b10
e
b13
b11
b1
Wa
a
2
a
2
Ast

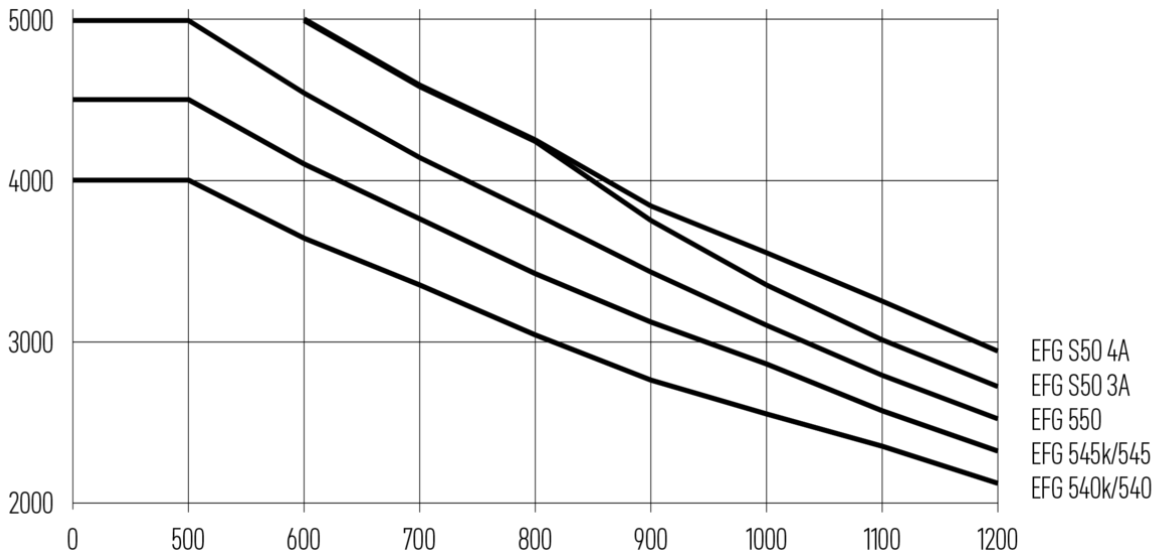
5000
4000
3000
2000
0
500
600
700
800
900
1000
1100
1200
EFG S50 4A
EFG S50 3A
EFG 550
EFG 545k/545
EFG 540k/540

VDI table

Characteristic	1.1	Manufacturer (abbreviated description)			Jungheinrich						
	1.2	Manufacturer's type designation			EFG 540k-S50						
	1.3	Drive			electric						
	1.4	Operation			Seat						
	1.5	Load capacity/load	Q	kg	4000		4500		4990	5000	
	1.6	Load centre distance	c	mm	500					600	
	1.8	Load distance, centre of drive axle to fork	x	mm	532					547	
	1.9	Wheelbase	y	mm	1856	2000	1856	2000		2080	
Weights	2.1.1	Service weight (incl. battery)		kg	6931	6854	7305	7290	7700	8248	
	2.2	Axle load laden front/rear		kg	9887 / 1044	9853 / 1000	10691 / 1115	10655 / 1135	11488 / 1212	11881 / 1367	
	2.3	Axle load unladen front/rear		kg	3663 / 3268	3789 / 3064	3688 / 3617	3833 / 3457	3908 / 3792	4124 / 4124	
Wheels/suspension system	3.2	Tyre size, front			355/45-15 (28x12,5-15)						
	3.3	Tyre size, rear			200/75-9 (21x8-9)					250/60-12 (23x10-12)	
	3.5	Wheels, number front/back (x=driven)			2x/2						
	3.6	Tread width, front	b10	mm	1155						
	3.7	Tread width, rear	b11	mm	950					1200	
Basic dimensions	4.1	Forward/backward tilt of mast	a/ß	°	6 / 8						
	4.2	Retracted mast height (h1)	h1	mm	2421					2621	
	4.3	Free lift (h2)	h2	mm	150						
	4.4	Lift (h3)	h3	mm	3300					3430	
	4.5	Extended mast height (h4)	h4	mm	3996		4139			4384	
	4.7	Height of overhead guard (cab)	h6	mm	2360		2359			2357	
	4.8	Seat height/stand height	h7	mm	1345		1344			1342	
	4.12	Coupling height	h10	mm	406	407	406	407	406	404	
	4.12.1	2. Coupling height		mm	569	570	569	571	569		
	4.19	total length	l1	mm	3834	3978	3834	3978		4132	
	4.20	Length including fork shank	l2	mm	2684	2828	2684	2828		2982	
	4.21.1	total width	b1	mm	1453					1461	
	4.22	Fork dimensions	s/ e/l	mm	50 x 125 x 1150				50 x 150 x 1150	60 x 150 x 1150	
	4.24	Fork carriage width	b3	mm	1260						
	4.31	Ground clearance laden under mast	m1	mm	158		156	157	155	156	
	4.32	Ground clearance centre of wheelbase	m2	mm	141		140			137	
	4.34.1	Aisle width (pallet 1000×1200 sideways)	Ast	mm	4073	4222	4073	4222		4543	
	4.34.2	Aisle width (pallet 800x1200 length)	Ast	mm	4273	4422	4273	4422		4743	
	4.35	Turning radius	Wa	mm	2341	2490	2341	2490		2796	
	4.36	Smallest pivot point distance	b13	mm	653	701	653	701		765	

Performance data	5.1	Travel speed laden/unladen (Efficiency | drivePLUS)	km/h	17 / 17 | 20 / 20					17 / 17 | 17 / 18
	5.2	Lift speed laden/unladen (Efficiency | liftPLUS)	m/s	0.4 / 0.45 | 0.4 / 0.51		0.38 / 0.45 | 0.44 / 0.47		0.37 / 0.45 | 0.44 / 0.5	
	5.3	Lowering speed laden/unladen (Efficiency | liftPLUS)	m/s	0.55 / 0.5 | 0.55 / 0.5				0.48 / 0.54 | 0.48 / 0.54	0.48 / 0.49 | 0.49 / 0.5
	5.5	Drawbar pull laden/unladen (Efficiency | drivePLUS)	N	6500 / 6500 | 6500 / 6500					
	5.6	Max. drawbar pull laden/unladen (Efficiency | drivePLUS)	N	18200 / 18200 | 22000 / 22000					
	5.7	Gradeability laden/unladen (Efficiency | drivePLUS)	%	8.5 / 13.5 | 10.9 / 17.3	8.6 / 13.7 | 11 / 17.6	7.8 / 12.6 | 10 / 16.2	8.1 / 12.8 | 10 / 16.3	7.3 / 12.1 | 9.4 / 15.6	7 / 11.3 | 9 / 15
	5.8	Max. gradeability laden/unladen (Efficiency | drivePLUS)	%	17 / 27.4 | 18.5 / 31.5	17.2 / 27.9 | 18.5 / 31.5	15.6 / 25.6 | 17.9 / 29.6	15.7 / 25.8 | 18 / 29.8	14.6 / 24.5 | 16.7 / 28.2	14 / 22.8 | 16 / 26
	5.9	Acceleration time laden/unladen (Efficiency | drivePLUS)	s	6.6 / 6.2 | 6 / 5.3		6.8 / 6.4 | 6.2 / 5.5		7 / 6.6 | 6.2 / 5.5	7.2 / 6.8 | 6.3 / 5.6
	5.10	Service brake		Friction brake (hydraulically operated)					
E-motor/Electronics	6.1	Drive motor, performance S2 60 min (Efficiency | drivePLUS)	kW	10.3 | 16					
	6.1.1	2. Drive motor, performance S2 60 min (Efficiency | drivePLUS)	kW	10.3 | 16					
	6.2	Lift motor, performance with S3 (Efficiency | liftPLUS)	kW	26.5 | 28					
	6.4	Battery voltage/nominal capacity	V / Ah	80 / 775	80 / 930	80 / 775	80 / 930		
	6.5	Battery weight	kg	1863	2178	1863	2178		
	6.6.1	Energy consumption according to EN cycle (Efficiency | PLUS)	kWh/h	10.1 | 10.5	10.1 | 10.4	11 | 11.3		11.6 | 12.1	12.5 | 12.5
	6.6.2	CO2 equivalent according to EN ISO 23308 (Efficiency | PLUS)	kg/h	5.46 | 5.7	5.46 | 5.6	5.94 | 6.1		6.27 | 6.5	6.75 | 6.8
	6.7	Throughput (Efficiency | PLUS)	t/h	248 | 264		266 | 288		315 | 330	295 | 320
	6.8	Turnover efficiency according to VDI 2198 (Efficiency | PLUS)	t/kWh	23.3 | 21.5		24.9 | 23.1		27.1 | 25.3	26 | 24
Other	10.1	Operating pressure for attachment	bar	240					
	10.2	Oil flow for attachments	l/min	45					

- This data sheet according to VDI guideline 2198 only states the technical values of the standard truck. Different tyres, other masts, additional equipment etc. may result in different values.

The German production facilities in Norderstedt, Moosburg and Landsberg are certified as well as our Genuine Parts Center in Kaltenkirchen.

ISO 9001
ISO 14001

Jungheinrich fork lift trucks meet European safety requirements.

CE

JUNGHEINRICH